City of Manistee

Infrastructure Design Standards

City of Manistee Infrastructure Design Standards

Established July 2008

TABLE OF CONTENTS

	Section
Engineering Report	
Major Street	1
Minor Street	3
Water Main	5
Sanitary Sewer	10
Stormwater	15

ENGINEERING REPORT

ENGINEERING REPORT

Engineering services for projects that create City of Manistee owned infrastructure are performed in three steps: a) an Engineering Report is submitted for approval, b) plans and specifications are submitted for approval, and c) construction administration is provided including inspections and testing prior to the submission of as-builts for City acceptance.

The purpose of the Engineering Report is to enable the City to determine whether the current municipal infrastructure is sufficient to support the new development. The Engineering Report should be submitted either with or before the zoning land use applications. Please refer to Article 22 of the Zoning Ordinance for Site Plan requirements. The City may waive some/all of the requirements for the Engineering Report for small scale/low impact projects. Following are the requirements for an Engineering Report.

The Engineering Report: identifies and evaluates problems; assembles basic information; presents criteria and assumptions; describes financing methods; and offers a conclusion with a proposed project for the City's consideration. The planning document must include sufficient detail to demonstrate that the proposed project meets applicable criteria of the City of Manistee Infrastructure Standards.

Architectural, structural, mechanical, and electrical designs are usually excluded. Sketches may be desirable to aid in presentation of a project.

Engineering Reports must be completed for all infrastructure projects. The determination and classification as major or local street; collection or interceptor sewer and pump station capacities will be made by the City based on a review of the recommended classification in the Engineering Report.

The Engineering Report shall contain the following and other pertinent information as required by the City:

1. Development Description
Description of the City infrastructure proposed for construction.

2. Impact on Existing Road, Water, Wastewater Facilities and Stormwater.
The impact of the proposed project on all existing infrastructure facilities, including roads, water mains, gravity sewers, lift stations, and treatment facilities must be evaluated. This includes all sewer facilities "downstream" of the project.

3. Drawings identifying the project site and the anticipated location and alignment of proposed infrastructure facilities are required.

4. Engineering Criteria
Engineering criteria to be used in design of the project shall be included.

5. Site Information
Project site information should include topography, soils, geologic conditions, groundwater level, floodway or floodplain considerations, and other pertinent site information.

6. Alternative Selection
The reasons for selection of the proposed alternative, including any lift station sites, and how the project fits into a long term plan should be discussed.

7. Environmental Review
Consideration should be given to minimizing any potential adverse environmental effects of the proposed project. If appropriate, compliance with planning requirements of federal, state, and local regulatory agencies shall be documented.

8. Planning and Service Area
Planning area and existing and potential future service area should be discussed.

9. Population Projection and Planning Period
Present and predicted population shall be based on a 20 year planning period. Phased construction of facilities should be considered.

10. Flow and Organic Load
The anticipated design average and design peak flows for water and wastewater for the existing and ultimate conditions must be established. The basis of the projection of initial and future flows and waste load must be included and must reflect the existing, or initial service area, and the anticipated future service area.

11. Hydraulic Capacity – Water and Sewer
The following shall be identified and used as a basis for design for water mains, sewers and lift stations.

a. Design Average Flow

b. Design Maximum Day Flow

c. Design Peak Hourly Flow

d. Design Peak Instantaneous Flow

12. Proposed revisions to the existing infrastructure system including the adequacy of portions not being changed by the project must be evaluated.

13. Emergency operational requirements shall be provided. Lift stations shall be provided with a backup generator as described in the Standard Details.

Following the City's approval of the Engineering Report, as modified if necessary, the Engineer may proceed to the preparation of construction plans, specifications and contractual documents. Please note:

Unless specifically modified by these Standard Details, all current rules, regulations, standards and requirements of the Michigan Department of Transportation, the Michigan Department of Environmental Quality, the 10 States Standards and the AWWA apply for City of Manistee Infrastructure.

The Final Plans and Specifications must be submitted for the City's review. The developer should anticipate the City review to require two weeks. No construction can be initiated prior to the City's approval of the plans and specifications and the receipt of all state and local permits as required.

Following Chapters provide specific Standards that must be met for all municipal infrastructure. Strict compliance with these Standards will facilitate and expedite the City review.

MAJOR STREETS

Streets

1. Major

1.1. All new Major Streets developed shall be constructed within an 80 foot Right of Way.

1.2. All new Major Streets shall include curb and gutter and a piped storm sewer system with an appropriate discharge.

1.3. The minimum width for a new Major Street is 35 feet, measured from the back of curb to back of curb.

1.4. Non-motorized, spatially segregated parallel lanes are to be provided. The City may determine whether the lane is a sidewalk or a bike path or a multiuse lane.

2. Construction

2.1. All construction will be in accordance with plans and specification that have been approved by the City Engineer. A basis of design shall be submitted to the City indicating the anticipated traffic loadings the mix design and the application rates of the HMA. The following minimums apply.

2.2. All sub-grades must be 12 inches of Class II granular materiel, inspected and approved by the City Engineer before aggregate may be placed.

2.3. The aggregate base must be placed at a minimum of 8 inches depth.

2.4. The sub-grade and base must each be compacted using a MDOT approved method until 95% of MDD has been obtained.

2.5. The aggregate base must be MDOT 22A, unless the City specifically approves an alternate.

2.6. The base must be inspected and approved by the City Engineer before any HMA is placed.

2.7. The HMA will be placed in two layers, the base course and the leveling/wear course with an MDOT approved asphalt emulsion properly applied between courses. Each layer shall be a minimum of 2 inches in depth.

2.8. All construction will be in accord with MDOT weather limitations. This applies to construction of the gravel base in addition to pavement limitations.

2.9. No bituminous valley gutters are permitted. All curb and gutters must meet the Manistee Standard Detail.

2.10. Poor drainage, sub-soils, high ground water and other conditions may dictate higher standards, at the City's discretion.

See Standard Details.

MINOR STREETS

Streets

3. Minor

3.1. All new Local Streets shall be constructed within a 66 foot Right of Way.

3.2. Local streets do not require curb and gutter unless necessary for storm water control. However curb and gutter is required at the radius for all intersections with public or private streets and parking lots.

3.3. The minimum paved width for a new Local Street is 24 feet, measured from the edge to edge.

3.4. A non-motorized, spatially segregated parallel lane is to be provided. The City may determine whether the lane is a sidewalk and/or a bike path.

4. Construction

4.1. All construction will be in accordance with plans and specification that have been approved by the City Engineer. The following minimums apply.

4.2. All sub-grades must be 12 inches of Class II granular material, inspected and approved by the City Engineer before aggregate may be place.

4.3. The aggregate base must be a minimum of 8 inches.

4.4. The sub-grade and base must each be compacted using a MDOT approved method until 95% of MDD has been obtained.

4.5. The aggregate must be MDOT 22A, unless the City specifically approves an alternate.

4.6. The base must be inspected and approved by the City Engineer before any HMA is placed.

4.7. The HMA must be placed in two layers, the base course and the leveling/wear course with an MDOT approved asphalt emulsion properly applied between courses. The anticipated traffic loadings will dictate the mix design and the application rates of the HMA.

4.8. All construction will be in accord with MDOT weather limitations. This applies to construction of the gravel base in addition to pavement limitations.

4.9. No bituminous valley gutters are permitted. All curb and gutters that are included on Local Streets must meet the Manistee Standard Detail.

4.10. Poor drainage, sub-soils, high ground water and other conditions may dictate higher standards, at the City's discretion.

4.11 Standard Details
Number

4.11.1 Major Street Cross-section

4.11.2 Minor Street Cross-section

4.11.3 Minor Street Cross-section with parking

4.11.4 Standard Curb

4.11.5 Rolled Curb

4.11.6 Tip out Curb

4.11.7 Integral Curb

4.11.8 Curb Transition

4.11.9 Standard Sidewalk

© COPYRIGHT 2007
ABDNMARCHE CONSULTANTS, INC.

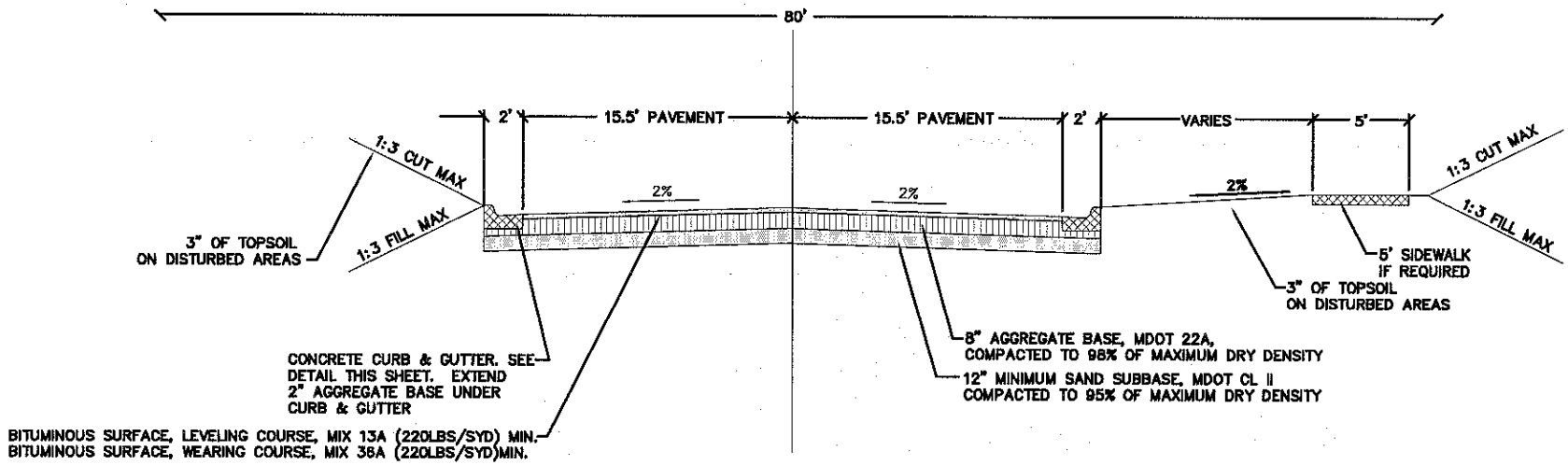

MAJOR STREET SECTION
NOT TO SCALE

CITY OF MANISTEE	
MAJOR STREET CROSS-SECTION	
REVISION DATE:	JAN. 2008
APPROVED BY:	STANDARD DESIGN:
	SD - 4.11.1

© COPYRIGHT 2007
ADOMMARCHE CONSULTANTS, INC.

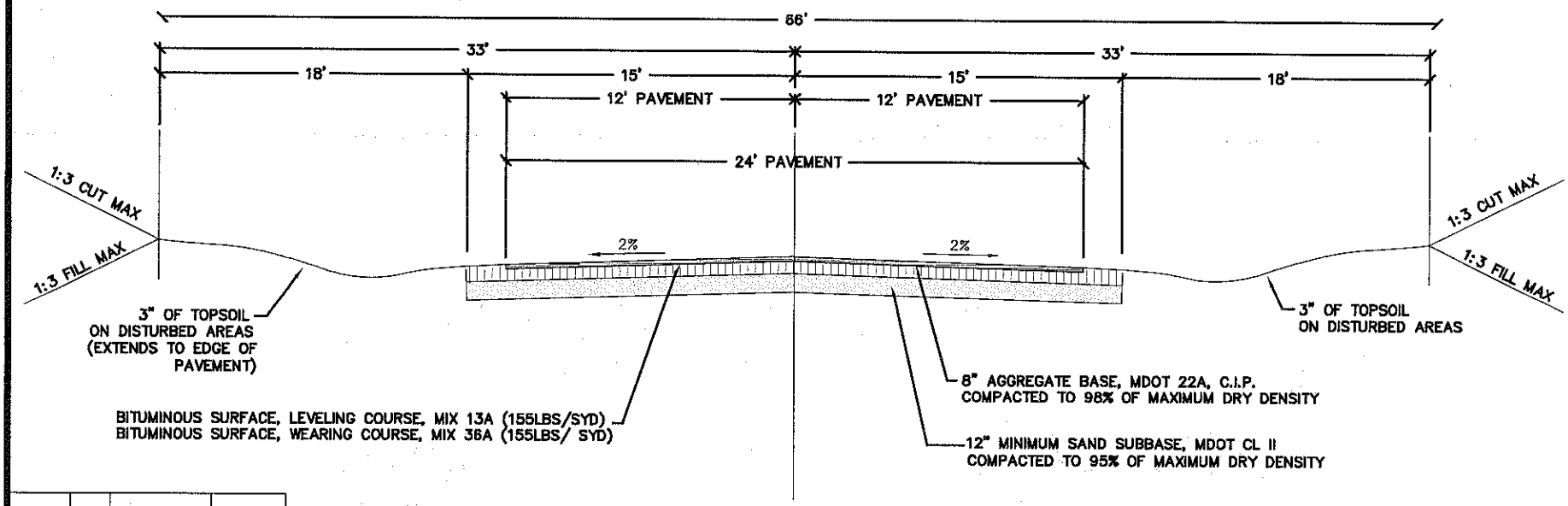

MINOR ROADWAY SECTION (NO PARKING)

NOT TO SCALE

CITY OF MANISTEE	
MINOR STREET CROSS-SECTION	
REVISION DATE:	JAN. 2008
APPROVED BY:	STANDARD DESIGN:
	SD - 4.11.2

© COPYRIGHT 2007
ABDNMARCHE CONSULTANTS, INC.

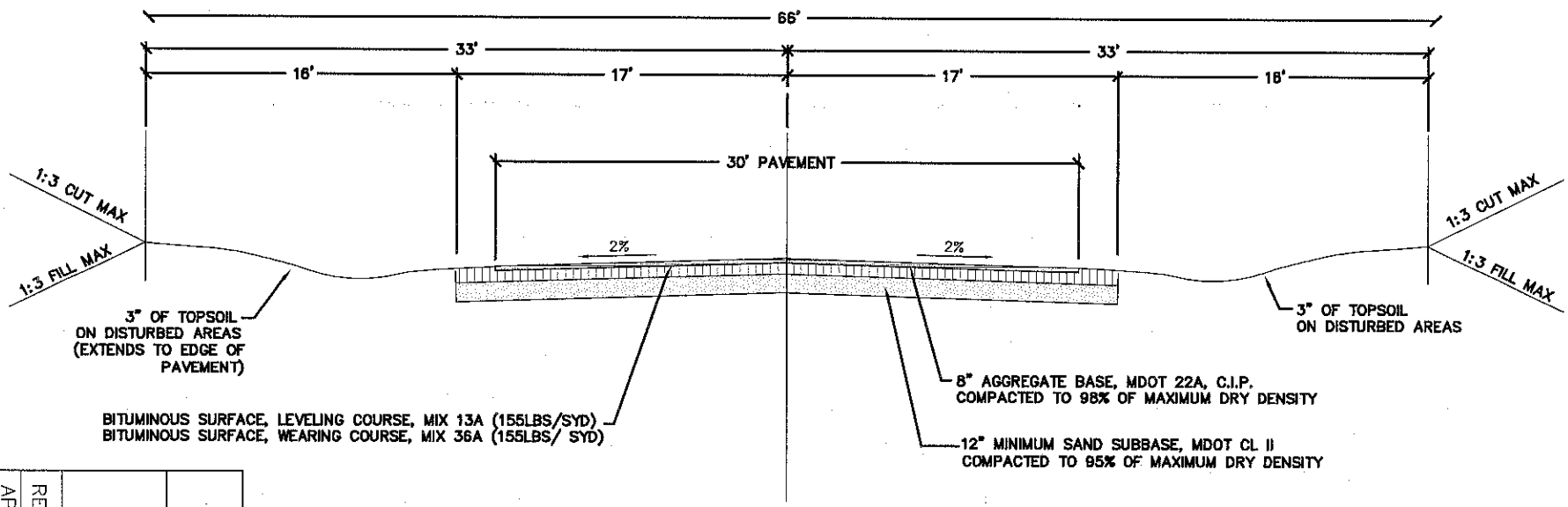

MINOR ROADWAY SECTION (W/PARKING)

NOT TO SCALE

CITY OF MANISTEE

MINOR STREET CROSS-SECTION

REVISION DATE: JAN. 2008

APPROVED BY:

STANDARD DESIGN:

SD - 4.11.3

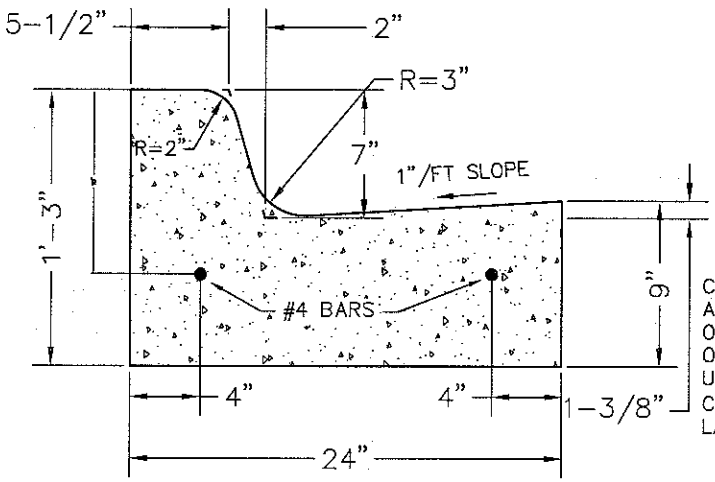

CONTRACTION JOINTS MUST BE PLACED EVERY 10' AND EXPANSION JOINTS TO BE PLACE A MINIMUM OF 350 FEET APART AND AT ALL SPRING POINTS ON CURVES.
USE GRADE A CONCRETE AND 6A STONE
CONCRETE: 0.0632 CYD/FT
LANE TIES OMITTED

24" CONCRETE CURB DETAIL

(M.D.O.T. DETAIL C-4)
NOT TO SCALE

CITY OF MANISTEE	
CURB STANDARD	
REVISION DATE: JAN. 2008	
APPROVED BY:	STANDARD DESIGN: SD - 4.11.4

© COPYRIGHT 2007 ABONMARCHE CONSULTANTS, INC.

E:\CIVIL 3D\ENGM7\ y of Manistee\dwg\M7-0915 Details A-C.dwg, CURB-, 7/10/2008 10:50:24 AM, eschindlbeck

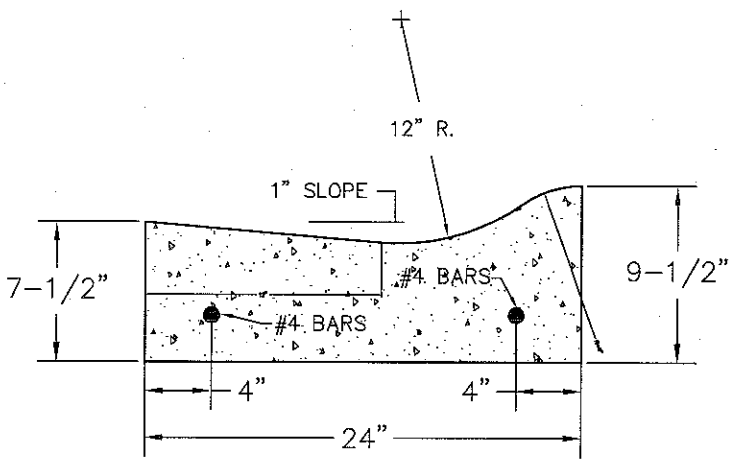

CONTRACTION JOINTS MUST BE PLACED EVERY 10' AND EXPANSION JOINTS TO BE PLACE A MINIMUM OF 350 FEET APART AND AT ALL SPRING POINTS ON CURVES.
USE GRADE A CONCRETE AND 6A STONE
MINIMUM GRADE SHALL BE 0.4%

ROLLED CURB DETAIL

NOT TO SCALE

CITY OF MANISTEE	
ROLLED CONCRETE CURB DETAIL	
REVISION DATE: JAN. 2008	
APPROVED BY:	STANDARD DESIGN: SD - 4.11.5

© COPYRIGHT 2007 ABONMARCHE CONSULTANTS, INC.

E:\CIVIL 3D\ENGM7\ y of Manistee\dwg\M7-0915 Details A-C.dwg, CURB-low prof, 7/10/2008 10:30:28 AM, cschindlbeck

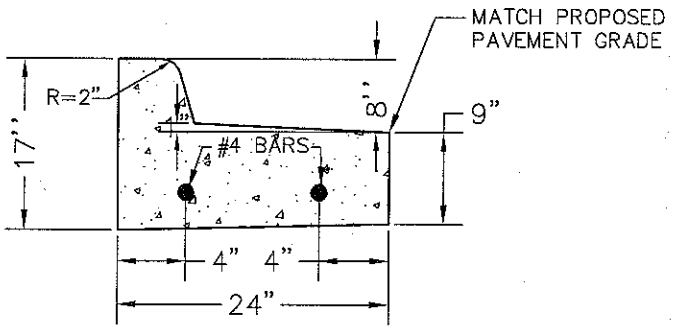

PROPOSED TIP-OUT CONCRETE CURB & GUTTER

NOT TO SCALE

ALL OTHER SPECIFICATIONS SHOULD
MEET THE CURB STANDARD

CITY OF MANISTEE	
CURB DETAIL TIP OUT	
REVISION DATE: JAN. 2008	
APPROVED BY:	STANDARD DESIGN: SD - 4.11.6

© COPYRIGHT 2007
ABONMARCHE CONSULTANTS, INC.

E:\CIVIL 3D\ENG\M7(y of Manistee\dwg\M7-0915 Details A-C.dwg, CURB-tipout, 7/10/2008 10:50:33 AM, eschindlbeck

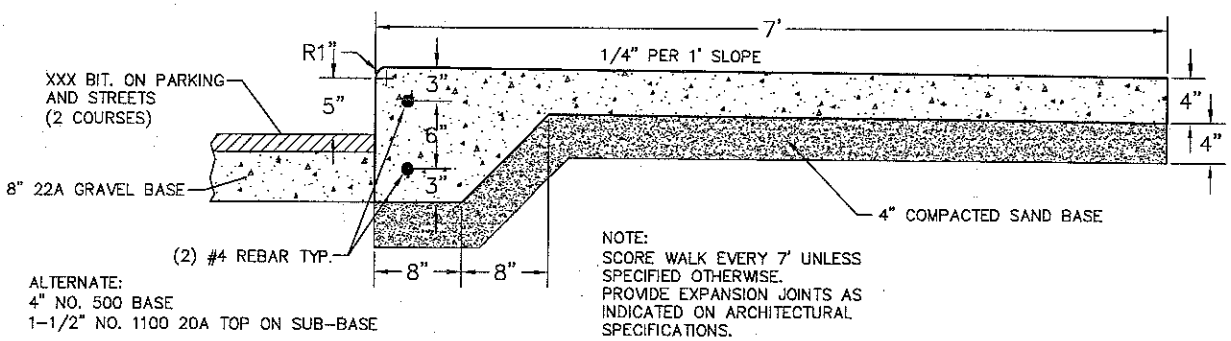

INTEGRAL SIDEWALK AND CURB DETAIL

NOT TO SCALE

CITY OF MANISTEE	
CURB INTEGRAL	
REVISION DATE: JAN. 2008	
APPROVED BY:	STANDARD DESIGN: SD - 4.11.7

© COPYRIGHT 2007 ABOMMARCHE CONSULTANTS, INC.

E:\CIVIL 3D\ENGM7 by of Manistee\dwg\M7-0915 Details A-C.dwg, CURB-intg, 7/10/2008 10:50:37 AM, cschindlbeck

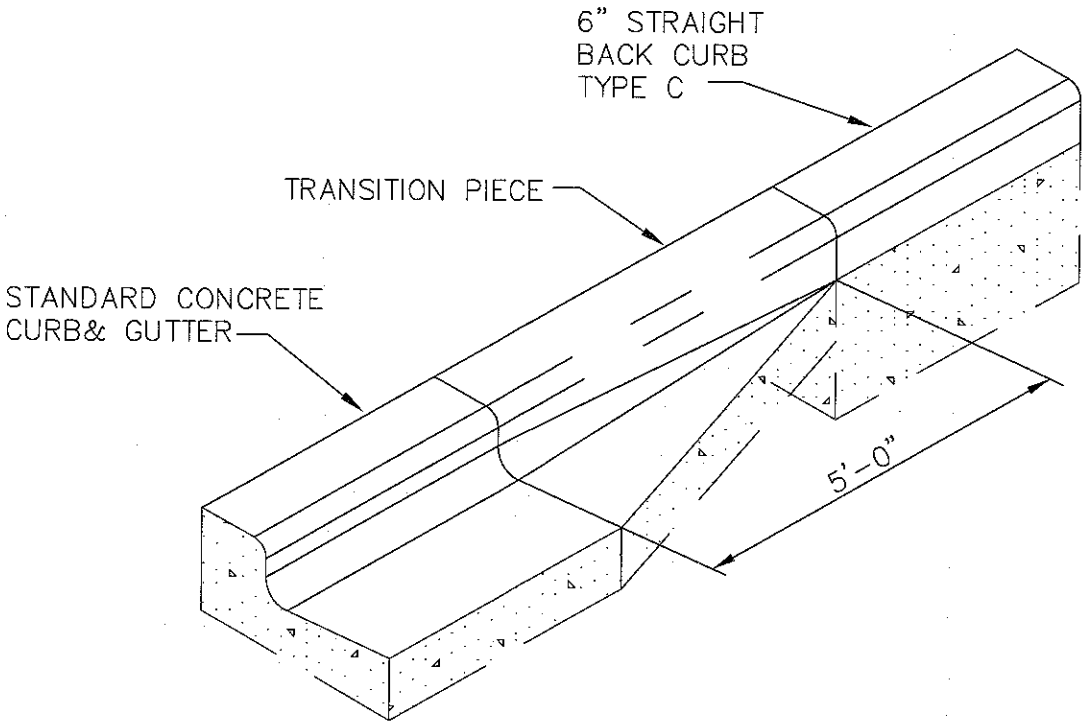

TRANSITION PIECE
CURB & GUTTER TO CURB
NOT TO SCALE

CITY OF MANISTEE	
CURB TRANSITION	
REVISION DATE: JAN. 2008	
APPROVED BY:	STANDARD DESIGN: SD - 4.11.8

© COPYRIGHT 2007
ABONMARCHE CONSULTANTS, INC.

E:\CIVIL 3D\ENG\M7- ty of Manistee\dwg\M7-0915 Details A-C.dwg, CURB-Trans, 7/10/2008 10:50:42 AM, eschindlbeck

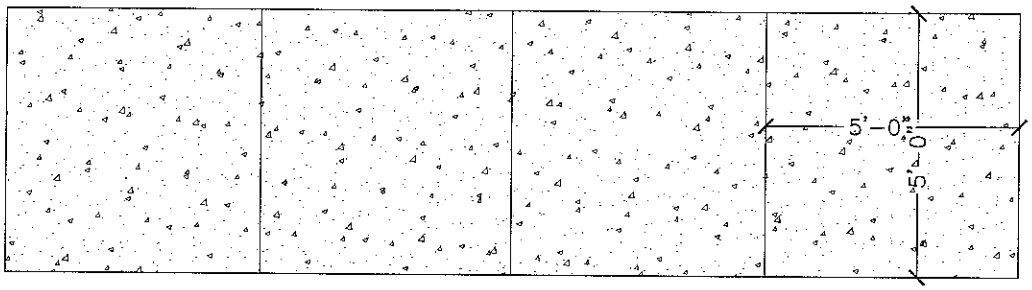

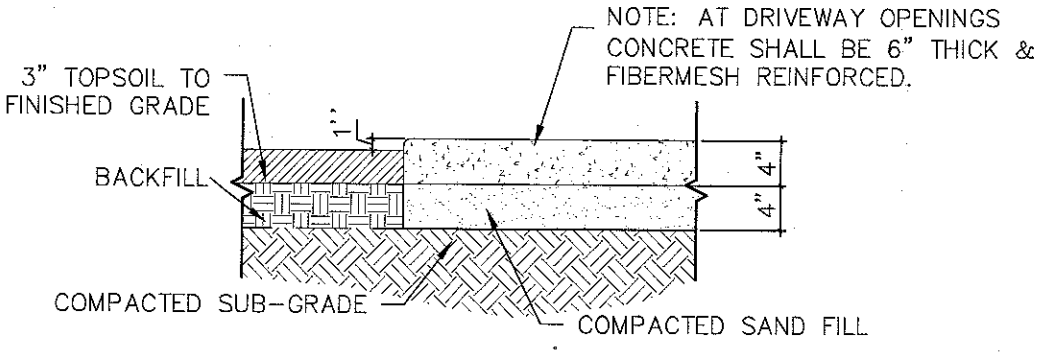

TYPICAL SIDEWALK DETAIL

(NOT TO SCALE)

CITY OF MANISTEE	
SIDEWALK #2	
REVISION DATE:	JAN. 2008
APPROVED BY:	STANDARD DESIGN: SD - 4.11.9

© COPYRIGHT 2007 ABONMARCHE CONSULTANTS, INC.

E:\CIVIL 3D\ENGM7\ ... y of Manistee\dwg\M7-0915 Details O-P.dwg, Pvmt-sidewalk#2, 7/10/2008 10:48:25 AM, cschindlbeck

WATERMAIN

Water Main

5. **Filing Information** – Final Plans and Specifications

A plan shall be submitted at a scale not less than 1 inch = 50 feet, containing the following:

5.1. Existing and proposed pipes and structures.

5.2. Pipe length, diameter, slope, material and class.

5.3. Calculations for sizing piping system.

5.4. Note specifying all work shall be completed in accordance with City of Manistee Standards.

5.5. See the City Engineer for additional information required for MDEQ permitting.

6. **Positioning**

6.1. All water mains are to be installed on the south and/or west side of the street right of way between the sidewalk and the curb line.

6.2. A minimum of ten feet of horizontal separation shall be maintained between the water main and all sanitary and storm sewer mains.

6.3. The maximum distance between gate valves shall be 1000 feet.

6.4. Gate valves are to be located at all tees and crosses in a manner to permit isolation of any water main segment by the use of no more than four valves.

6.5. When segments of a water main are isolated, a maximum of 20 services should be affected.

6.6. Maximum fire hydrant spacing shall be 500 feet in single family residential areas and 350 feet in commercial and industrial areas or at every intersection; whichever is closer. Hydrants in areas of "critical location" may also be required to maintain fire suppression capabilities.

6.7. Easements are required when water main is not installed in a street right of way. The easement shall be 20 feet wide, centered on the pipe.

6.8. Positioning of fittings, valves, hydrants and other appurtenances must be shown on drawings.

6.9. Looping of water main shall be made whenever possible to improve water quality and fire protection and to limit possible service disruptions.

6.10. All water mains must be ductile iron pipe with a minimum size of eight inches.

6.11. All new water mains shall have push joint (bell and spigot) connections and shall not have over 60% of the maximum permissible deflection at the joints as permitted by the manufacturer.

6.12. All water main extensions designed to service fire hydrants must be public.

7. Materials

7.1. Manistee standard fire hydrants shall be installed as necessary to provide the required fire flow. Hydrants will be located as approved.

7.2. 8 inch through 12 inch pipe shall be mortar lined Class 52 ductile iron.

7.3. Pipe larger than 12 inch shall be mortar lined Class 53 ductile iron.

7.4. All pipe shall be push joint (bell and spigot); all fittings shall be mechanical joints.

7.5. All valves 8 through 10 inch shall be resilient wedge with mechanical joint connection, epoxy coated, with a 2 inch operation nut and open clockwise.

7.6. All hydrants shall have 5 foot 6 inch bury, mechanical joint shoe, one 4 inch port and two 2-1/2 inch ports and open clockwise.

8. Construction

8.1. All construction will be in accordance with plans and specifications that have been approved by the City Engineer. The following minimums apply.

8.2. All water mains shall have a minimum of 5 feet of cover and a maximum of 6 feet of cover.

8.3. All valve boxes shall be centered on the operating nut of the valve and adjusted to grade.

8.4. All hydrants shall be installed with the center of the 4 inch pumper connection a minimum of 21 inches above the final grade. The 4 inch pumper connection shall be a maximum of 36 inches above final grade.

8.5. The 4 inch pumper connection shall face the paved portion of the street right of way.

8.6. Electrical conductivity shall be maintained through all water mains, fittings and appurtenances.

8.7. Joint restraint is required at all fittings. Thrust blocks are not acceptable.

8.8. Service taps shall be installed after pressure testing has been completed.

8.9. All mains shall be constructed according to current AWWA standards.

9. Testing and Completion

9.1. The contractor will perform a pressure test of the system by subjecting it to a minimum continuous pressure of 150 psi over a period of two hours. The City of Manistee Water Department or designee shall witness this test, unless other arrangements are pre-approved.

9.2. After satisfactory pressure testing, the system shall be chlorinated, flushed and samples taken on two separate days supplied to a MDEQ approved lab. These tests shall be performed in accordance MDEQ requirements.

9.3. Upon safe test results, the City of Manistee will conduct an activation inspection. It is the responsibility of the developer or contractor to schedule the inspection with the Water Department Manager.

9.4. As built plans must be submitted to the City on project completion.

9.5. Upon completion and acceptance by the City, the developer shall issue an ownership transfer document acceptable to the City Attorney.

9.6. Standard Details Number

9.6.1. Fire Hydrant and Connection

9.6.2. Blank

9.6.3. Gate Valve & Valve Box

9.6.4. Blank

9.6.5. Air Release Structure

9.6.6. Wet Tap

9.6.7. Dry Tap

9.6.8. Bore & Jack Detail

9.6.9 Utility Crossing

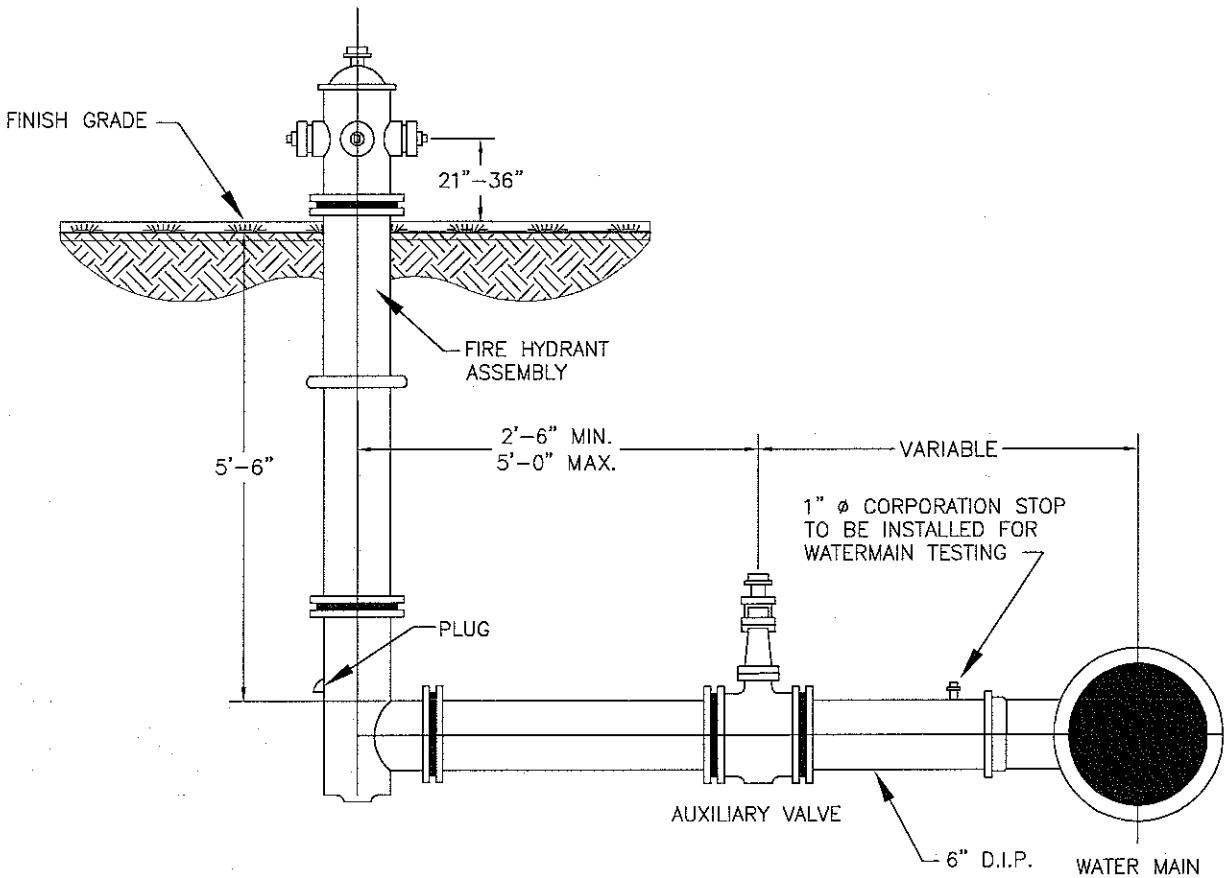

NOTE:
ALL CONNECTIONS TO BE MECHANICAL JOINTS (TYP.) W/JOINT RESTRAINT

STANDARD FIRE HYDRANT CONNECTION

NOT TO SCALE

CITY OF MANISTEE	
FIRE HYDRANT CONNECTION	
REVISION DATE: JAN. 2008	
APPROVED BY:	STANDARD DESIGN: SD - 9.6.1

E:\CIVIL 3D\ENGM7(y of Manistee\dwg\M7-0915 Details D-L.dwg, FireHyd, 7/10/2008 10:49:26 AM, cschindlbeck

© COPYRIGHT 2007
ABONMARCHE CONSULTANTS, INC.

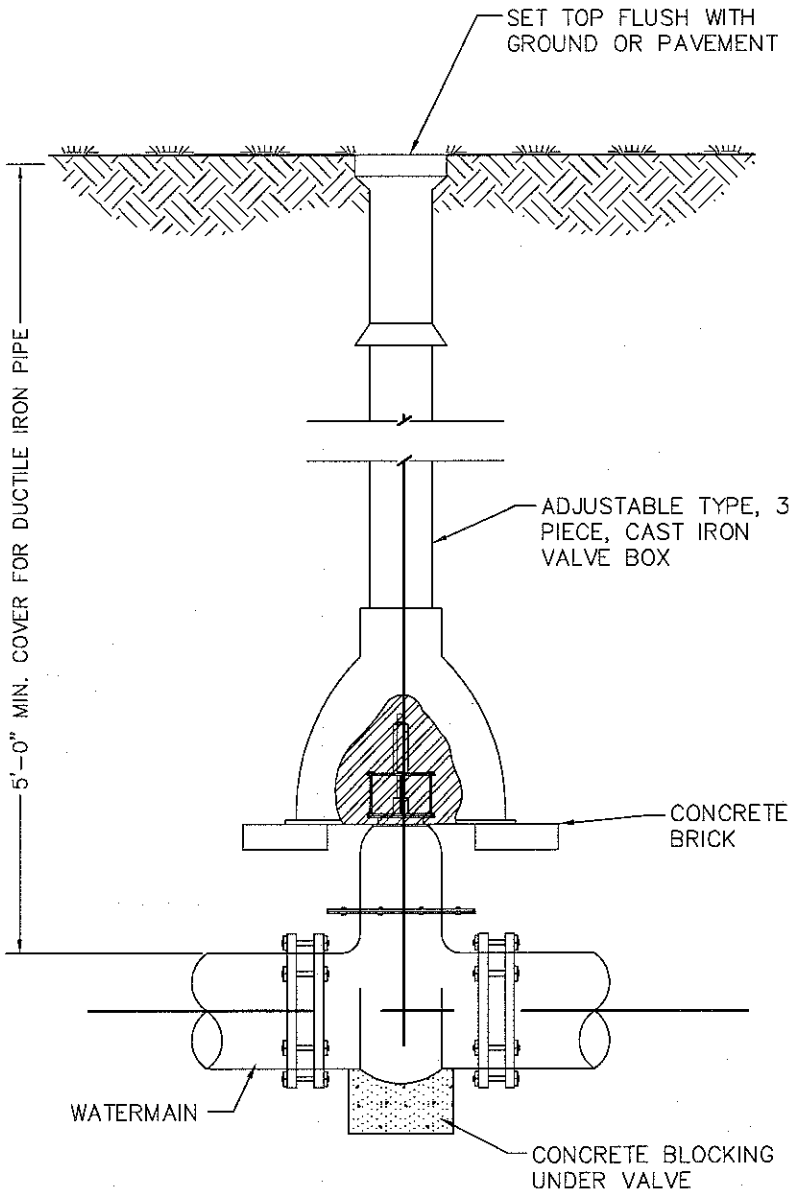

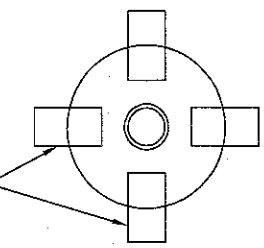

BRICK LOCATION

PLAN VIEW

TYPICAL GATE VALVE & VALVE BOX

NOT TO SCALE

CITY OF MANISTEE	
GATE VALVE & VALVE BOX	
REVISION DATE: JAN. 2008	
APPROVED BY:	STANDARD DESIGN: SD - 9.6.3

E:\CIVIL 3D\ENGM7(y of Manistee\dwg\M7-0915 Details D-L.dwg, GateValve & Bx, 7/10/2008 10:49:30 AM, cschindlbeck

© COPYRIGHT 2007 ABONMARCHE CONSULTANTS, INC.

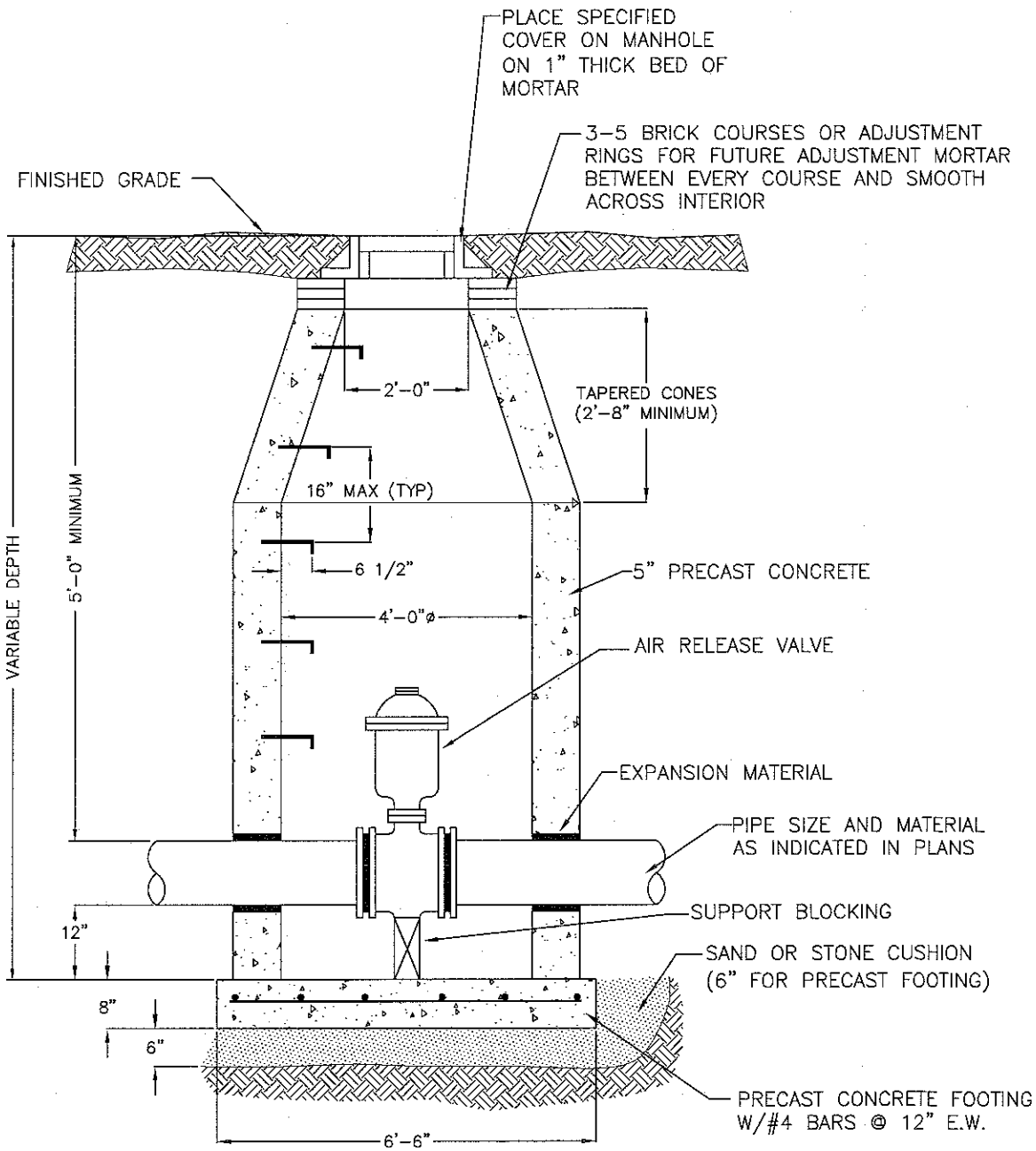

AIR RELEASE STRUCTURE – 4' DIA.

NOT TO SCALE

CITY OF MANISTEE	
AIR RELEASE STRUCTURE	
REVISION DATE: JAN. 2008	
APPROVED BY:	STANDARD DESIGN: SD - 9.6.5

© COPYRIGHT 2007 ABONMARCHE CONSULTANTS, INC.

E:\CIVIL 3D\ENGM7\ y of Manistee\dwg\M7-0915 Details A-C.dwg, AirRel, 7/10/2008 10:49:52 AM, cschindlbeck

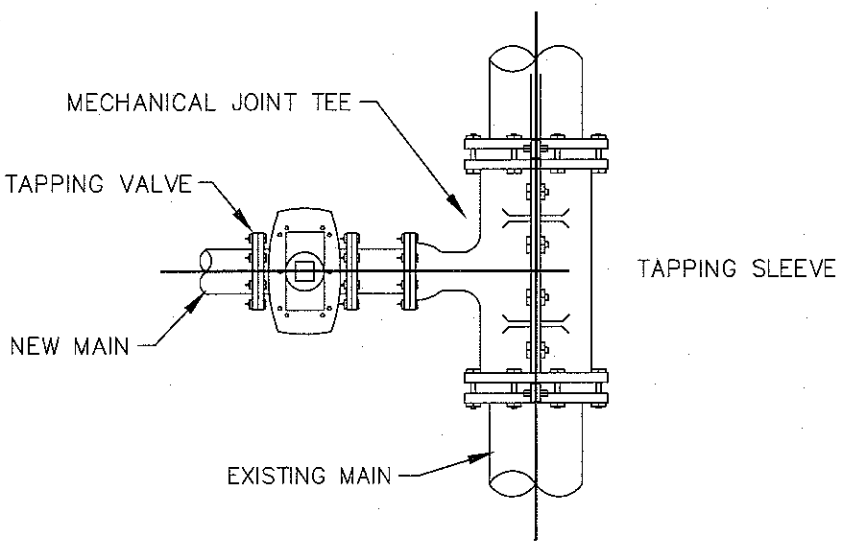

WET TAP METHOD

(UNDER PRESSURE)
CONNECTING NEW MAIN TO EXISTING MAIN
NOT TO SCALE

CITY OF MANISTEE	
WET TAP	
REVISION DATE: JAN. 2008	
APPROVED BY:	STANDARD DESIGN: SD - 9.6.6

© COPYRIGHT 2007
ABONMARCHE CONSULTANTS, INC.

E:\CIVIL 3D\ENG\M7\ y of Manistee\dwg\M7-0915 Details R-Z.dwg, WetTap, 7/10/2008 10:51:18 AM, cschindlbeck

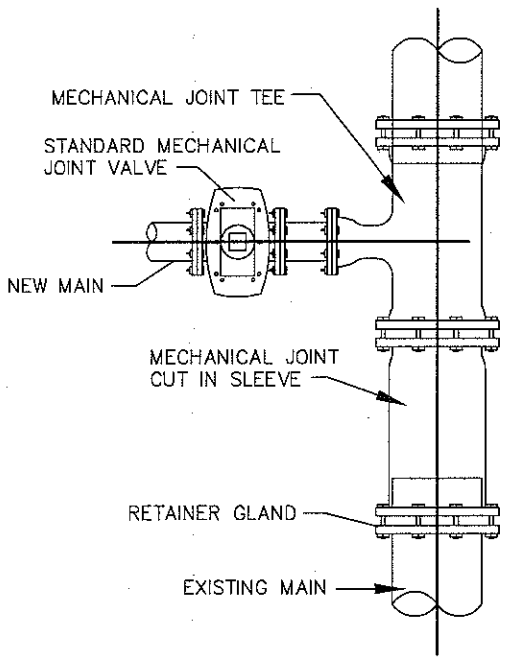

DRY TAP METHOD

CONNECTING NEW MAIN TO EXISTING MAIN
NOT TO SCALE

CITY OF MANISTEE	
WATERMAIN TAP DRY TAP METHOD	
REVISION DATE: JAN. 2008	
APPROVED BY:	STANDARD DESIGN: SD - 9.6.7

E:\CIVIL 3D\ENGIM7\ y of Manistee\dwg\M7-0915 Details D-L.dwg, DryTap, 7/10/2008 10:49:22 AM, cschindlbeck

© COPYRIGHT 2007
ABONMARCHE CONSULTANTS, INC.

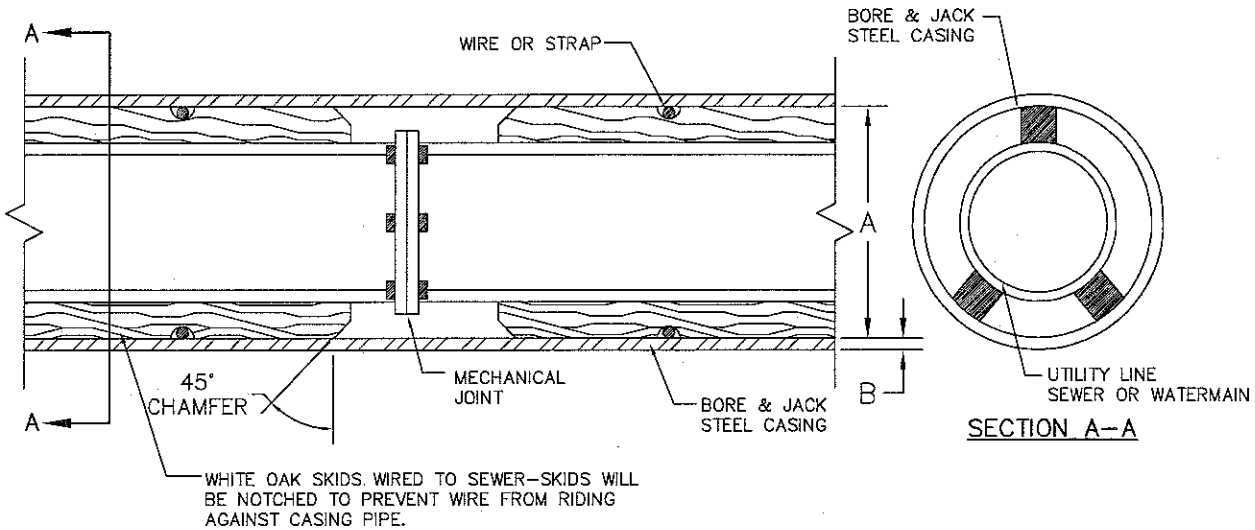

DIA. OF SEWER PIPE	DIA. OF MAIN	MIN. "A"	ROAD CROSSING MIN. "B"	RAILROAD CROSSING MIN. "B"
	6"	16"	.375	.375
	8"	16"	.375	.375
	12"	24"	.375	.500
10" & 12"	16"	24"	.375	.500
15"	20"	30"	.375	.500

CASING PIPE SHALL BE WELDED STEEL PIPE A.S.T.M. A–252, GR 2 UNLESS OTHERWISE SPECIFIED.

NOTES:

1. THE ENDS OF THE CASING SHALL BE SUITABLY PROTECTED AGAINST THE ENTRANCE OF FOREIGN MATERIAL, BUT SHALL NOT BE TIGHTLY SEALED.
2. WHEN BORING ALL VOIDS OUTSIDE OF CASING PIPE SHALL BE FILLED BY MEANS OF PRESSURE GROUTING WITH 1:3 CEMENT–SAND MORTAR, THIS WORK MUST BE ACCOMPLISHED WITHIN 24 HOURS AFTER THE CROSSING HAS BEEN COMPLETED. BORING SHALL EXTEND A MINIMUM OF 10 FEET OUTSIDE THE EDGES OF THE PAVEMENT.
3. SKIDS ARE TO BE A MINIMUM OF 80% OF PIPE LENGTH.
4. VOIDS BETWEEN CASING & CARRIER PIPE SHALL BE FILLED BY MEANS OF PRESSURE GROUTING WITH 1:3 CEMENT–SAND MORTAR

STANDARD CASING SECTION

NOT TO SCALE

CITY OF MANISTEE	
BORE & JACK DETAIL	
REVISION DATE: JAN. 2008	
APPROVED BY:	STANDARD DESIGN: SD - 9.6.8

E:\CIVIL 3D\ENGM7(y of Manistee\dwg\M7-0915 Details A-C.dwg, Bore&Jack, 7/10/2008 10:49:56 AM, cschindlbeck

© COPYRIGHT 2007
ABONMARCHE CONSULTANTS, INC.

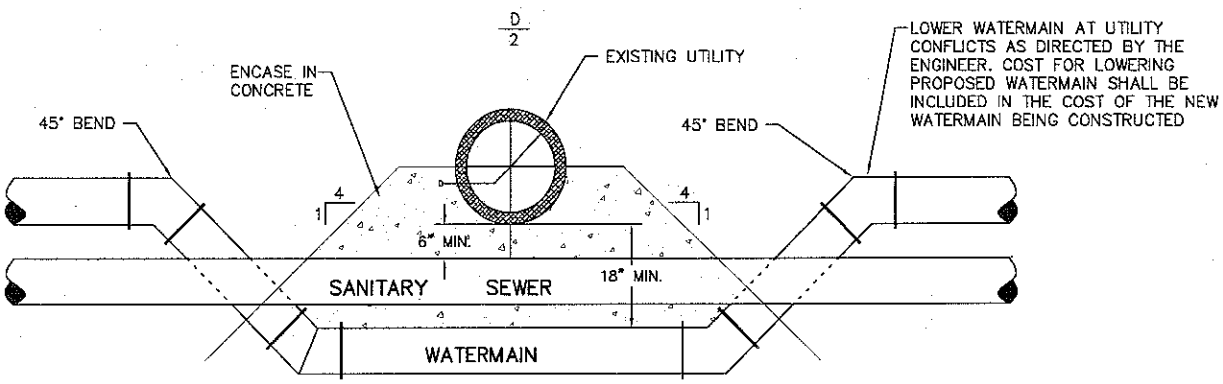

UTILITY CROSSING DETAIL

NOT TO SCALE

CITY OF MANISTEE	
UTILITY CROSSING	
REVISION DATE:	JAN. 2008
APPROVED BY:	STANDARD DESIGN: SD - 9.6.9

© COPYRIGHT 2007
ABONMARCHE CONSULTANTS, INC.

E:\CIVIL 3D\ENGM7 y of Manistee\dwg\M7-0915 Details R-Z.dwg, UtilCross, 7/10/2008 10:51:14 AM, cschindlbeck

SANITARY SEWER

Sanitary Sewer

10. **Filing Information** – Final Plans and Specifications

A plan at a scale not less than 1 inch = 50 feet, containing the following:

10.1 Tributary areas showing boundaries and buildings contributing to each structure (including off-site tributary areas).

10.2 Existing and proposed pipes and structures.

10.3 Proper identification and numbering of manholes and structures.

10.4 Invert and rim elevations for all structures.

10.5 Pipe length, diameter, slope, material and class.

10.6 Calculations for sizing piping system.

10.7 Capacity calculations for the receiving sewer and downstream pump stations.

10.8 Note specifying all work shall be completed in accordance with City of Manistee Standards.

10.9 Maintenance plan, including tasks and schedules.

11 Positioning and Design

11.1 All sanitary sewer lines are to be installed at the approximate centerline of the street right of way. A minimum of 10 feet of horizontal separation shall be maintained between sanitary sewer lines and water mains.

11.2 The maximum distance between manholes in the collection system shall be approximately 400 feet or located at each intersection; whichever is closer. The position of manholes, sanitary sewer leads, etc. must be shown on the plans.

11.3 The size and grade of the proposed sanitary sewer shall be shown on the plans.

11.4 See City Standards for lateral hook-up and other standard practices.

11.5 Any sewer designed to service more than one building must be a public sewer.

11.6 The minimum main size will be eight inches in diameter.

11.7 Easements are required when the sewer line is not installed in a public street right of way. The easement shall be 20 feet wide, centered on the pipe.

12. Materials

Refer to the City of Manistee Standards.

13. Construction

13.1 All construction will be in accordance with plans and specification that have been approved by the City Engineer. The following minimums apply.

13.2 All sanitary sewer manholes shall be installed with a minimum of one foot of drop across the manhole.

13.3 All sanitary sewer manholes shall be installed with 3-5 courses of leveling brick between the casting and the top of the manhole section.

13.4 All sanitary sewer leads should have property line risers to within 4 feet of the surface grade and be marked with an appropriate device. (2 x 4 marker with #4 rebar)

13.5 All sanitary sewer leads shall be securely plugged.

14. Testing and Completion

14.1 All sanitary sewer lines will be pressure tested and deflection tested.

14.2 All sanitary sewer lines will be TV inspected and an electronic record made of the inspection.

14.3 Upon completion, the City of Manistee will conduct an activation inspection. It is the responsibility of the developer or contractor to schedule the inspection with the Community Development Department.

14.4 As built plans must be submitted to the City on the completion of construction; both a hard copy and an electronic copy.

14.5 Upon completion and acceptance by the City, the developer shall issue an ownership transfer document acceptable to the City Attorney.

14.6 Standard Details

14.6.1 Standard Sanitary Manhole

14.6.2 Standard Shallow Manhole

14.6.3 Standard Clean Out

14.6.4 Sanitary Lateral Detail

14.6.5 Drop Connection

14.6.6 Standard Pipe Bedding

14.6.7 Cover Casting – Storm & Sanitary

14.6.8 Force Main outlet Manhole

14.6.9 Force Main Clean Out Manhole

14.6.10 Lift Station, Wet Well & Valve Vault

14.6.11 Lift Station Control Panel

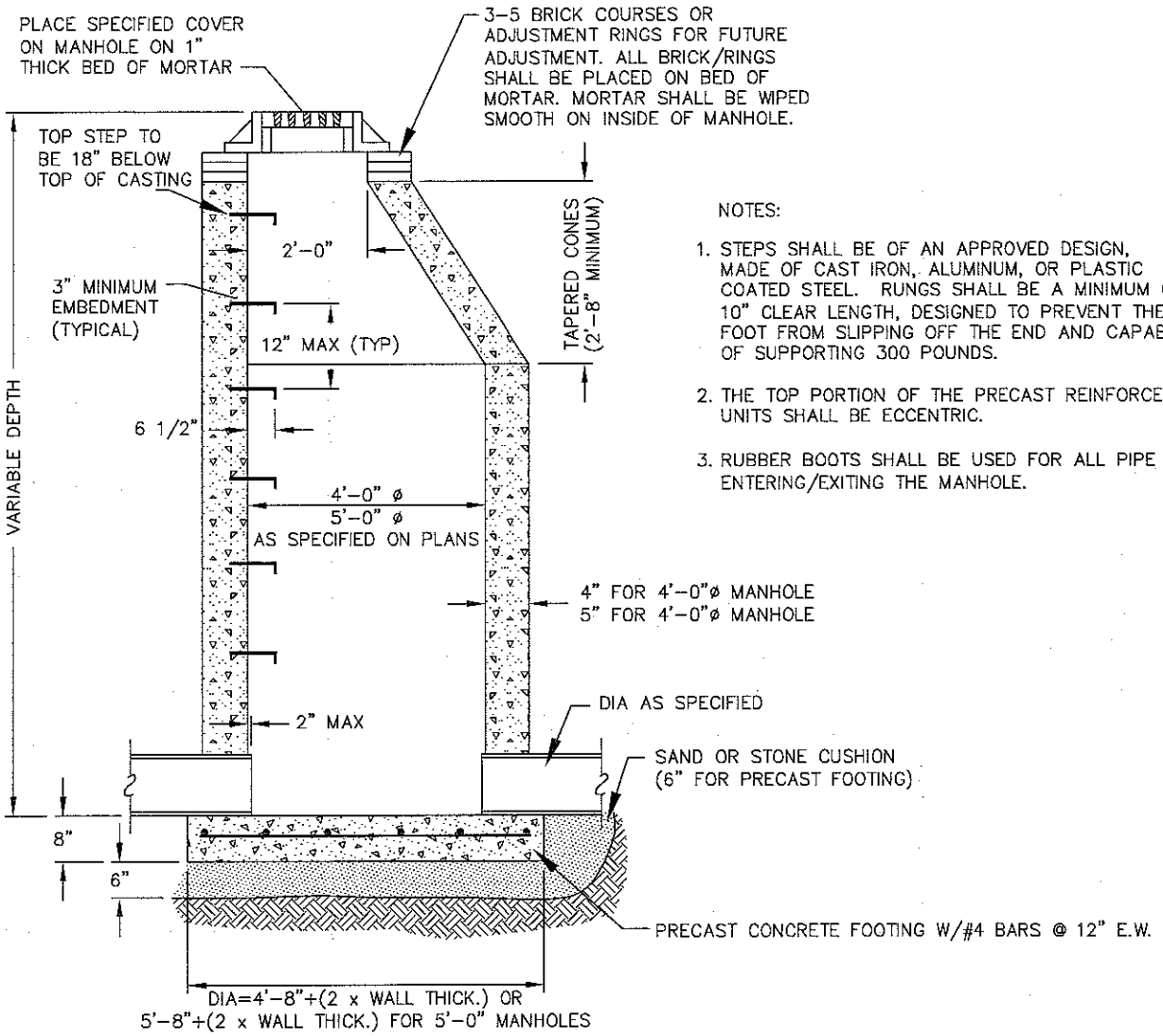

NOTES:

1. STEPS SHALL BE OF AN APPROVED DESIGN, MADE OF CAST IRON, ALUMINUM, OR PLASTIC COATED STEEL. RUNGS SHALL BE A MINIMUM OF 10" CLEAR LENGTH, DESIGNED TO PREVENT THE FOOT FROM SLIPPING OFF THE END AND CAPABLE OF SUPPORTING 300 POUNDS.
2. THE TOP PORTION OF THE PRECAST REINFORCED UNITS SHALL BE ECCENTRIC.
3. RUBBER BOOTS SHALL BE USED FOR ALL PIPE ENTERING/EXITING THE MANHOLE.

STANDARD SANITARY MANHOLE – 4' OR 5'

NOT TO SCALE

CITY OF MANISTEE	
STANDARD SANITARY MANHOLE	
REVISION DATE: JAN. 2008	
APPROVED BY:	STANDARD DESIGN: SD - 14.6.1

© COPYRIGHT 2007 ABONMARCHE CONSULTANTS, INC.

E:\CIVIL 3D\ENG\M7\ y of Manistee\dwg\M7-0915 Details M-N.dwg, MH-SAN-std, 7/10/2008 10:48:52 AM, cschindlbeck

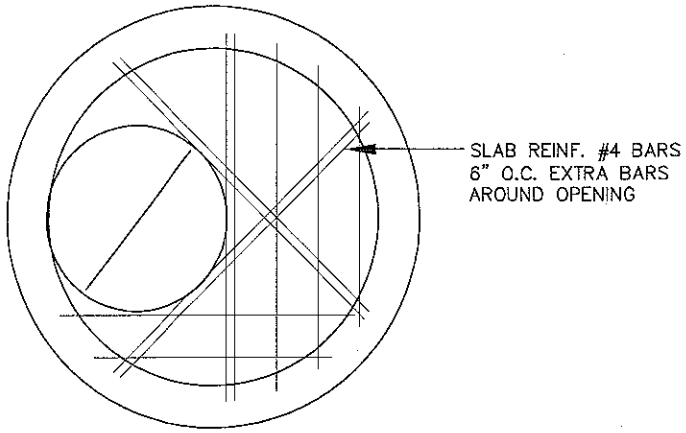

PLAN SLAB REINFORCING

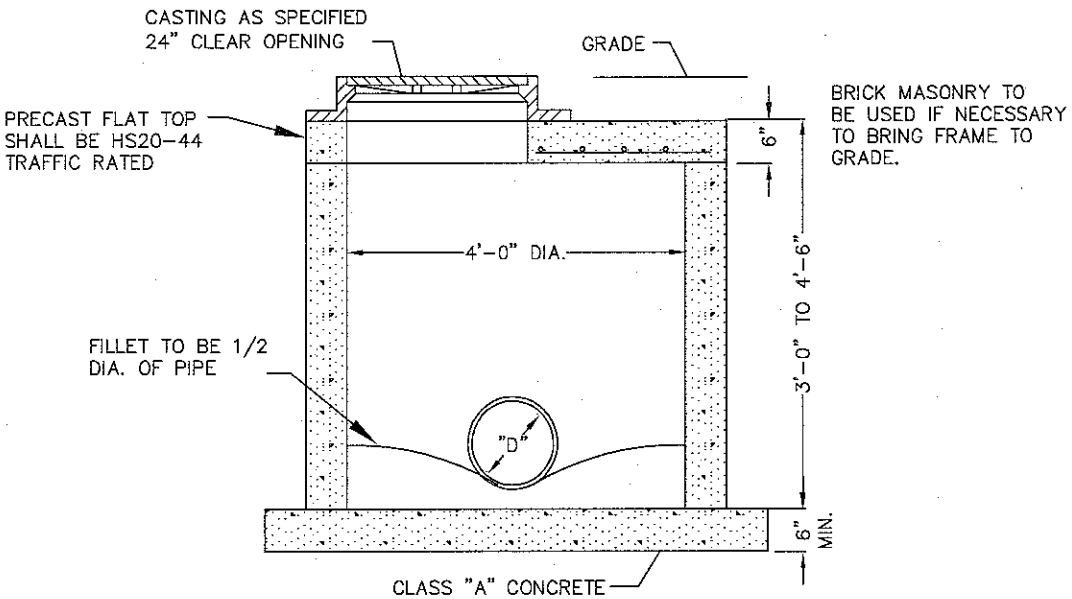

STANDARD SHALLOW MANHOLE

NOT TO SCALE

CITY OF MANISTEE	
STANDARD SHALLOW MANHOLE	
REVISION DATE: JAN. 2008	
APPROVED BY:	STANDARD DESIGN: SD - 14.6.2

© COPYRIGHT 2007
ABONMARCHE CONSULTANTS, INC.

E:\CIVIL 3D\ENG\M7\ y of Manisteel\dwg\M7-0915 Details M-N.dwg, MH-std shallw, 7/10/2008 10:48:55 AM, eschindlbeck

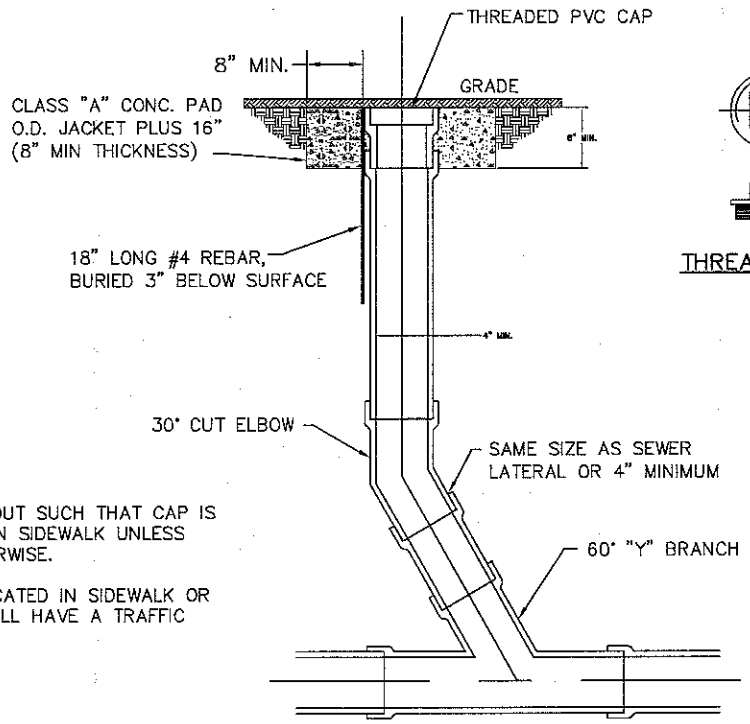

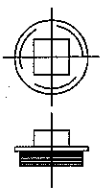

THREADED CAP

NOTE:

LOCATE CLEANOUT SUCH THAT CAP IS NOT LOCATED IN SIDEWALK UNLESS DIRECTED OTHERWISE.

CLEANOUTS LOCATED IN SIDEWALK OR DRIVEWAYS SHALL HAVE A TRAFFIC BEARING CAP.

TYPICAL CLEANOUT DETAIL

NOT TO SCALE

CITY OF MANISTEE	
SANITARY CLEAN OUT	
REVISION DATE: JAN. 2008	
APPROVED BY:	STANDARD DESIGN: SD - 14.6.3

E:\CIVIL 3D\ENGM7 by of Manistee\dwg\M7-0915 Details A-C.dwg, CO-san, 7/10/2008 10:50:06 AM, cschindlbeck

© COPYRIGHT 2007 ABONMARCHE CONSULTANTS, INC.

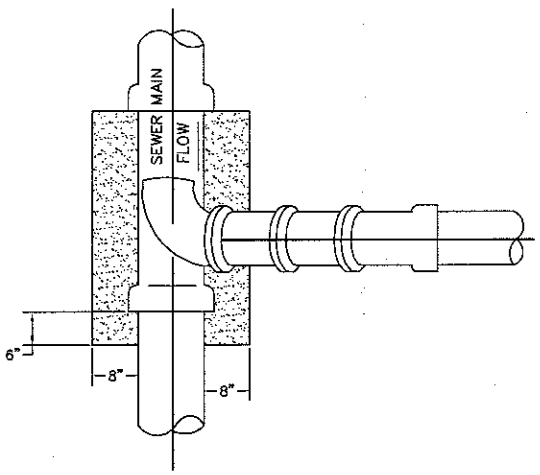

PLAN
NOT TO SCALE

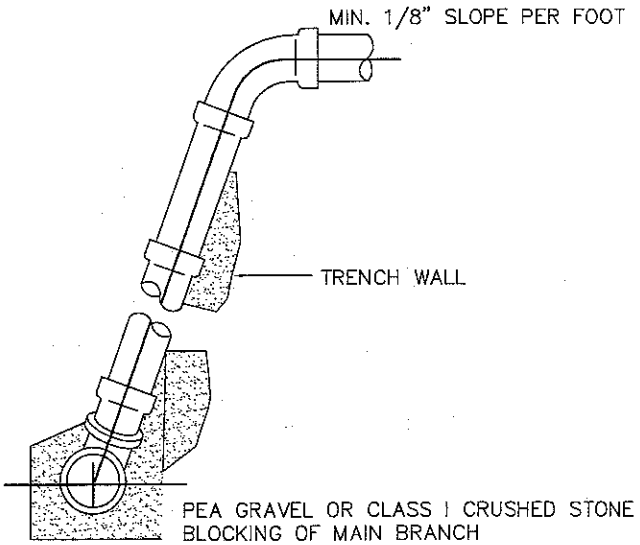

SLANT STACK
NOT TO SCALE

NOTE:
SANITARY LATERALS SHALL BE INSTALLED BELOW WATER MAINS OR AT LEAST 8 FEET DEEP AT THE CURB WHEN MAIN DEPTH ALLOWS. WHEN THE MAIN DEPTH IS LESS THEN 8 FEET, THE LATERALS SHALL BE INSTALLED AS DEEP AS POSSIBLE. SANITARY LATERALS SHALL BE 4" DIA. MIN. & 6" DIA. MAX.

SANITARY LATERAL DETAILS
NOT TO SCALE

CITY OF MANISTEE	
SANITARY LATERAL	
REVISION DATE: JAN. 2008	
APPROVED BY:	STANDARD DESIGN: SD - 14.6.4

E:\CIVIL 3D\ENGM7 by of Manistee\dwg\M7-0915 Details R-Z.dwg, SanLateral, 7/10/2008 10:51:10 AM, cschindlbeck

© COPYRIGHT 2007
ABONMARCHE CONSULTANTS, INC.

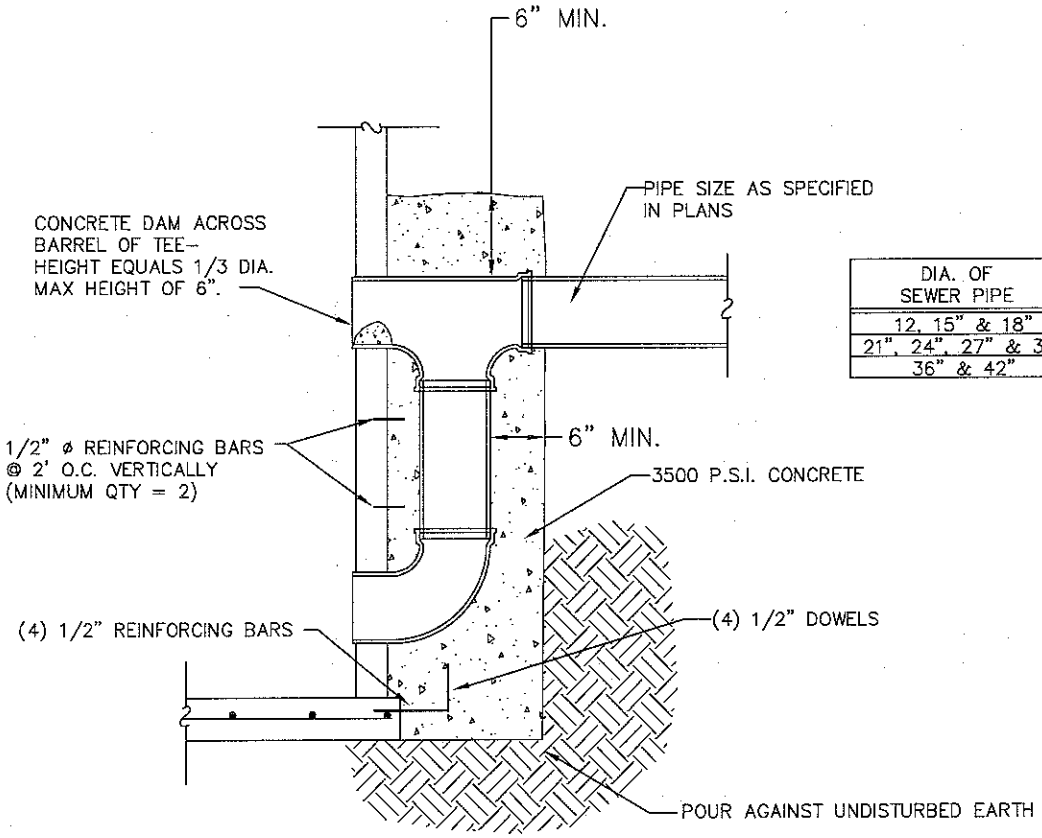

DIA. OF SEWER PIPE	DIA. OF DROP CONNECTION
12, 15" & 18"	12"
21", 24", 27" & 30"	18"
36" & 42"	24"

EXTERIOR DROP CONNECTION

NOT TO SCALE

CITY OF MANISTEE	
DROP CONNECTION EXTERIOR	
REVISION DATE: JAN. 2008	
APPROVED BY:	STANDARD DESIGN: SD - 14.6.5

© COPYRIGHT 2007 ABONMARCHE CONSULTANTS, INC.

E:\CIVIL 3D\ENG\M7\ y of Manistee\dwg\M7-0915 Details D-L.dwg, DropCon ext, 7/10/2008 10:49:18 AM, cschindlbeck

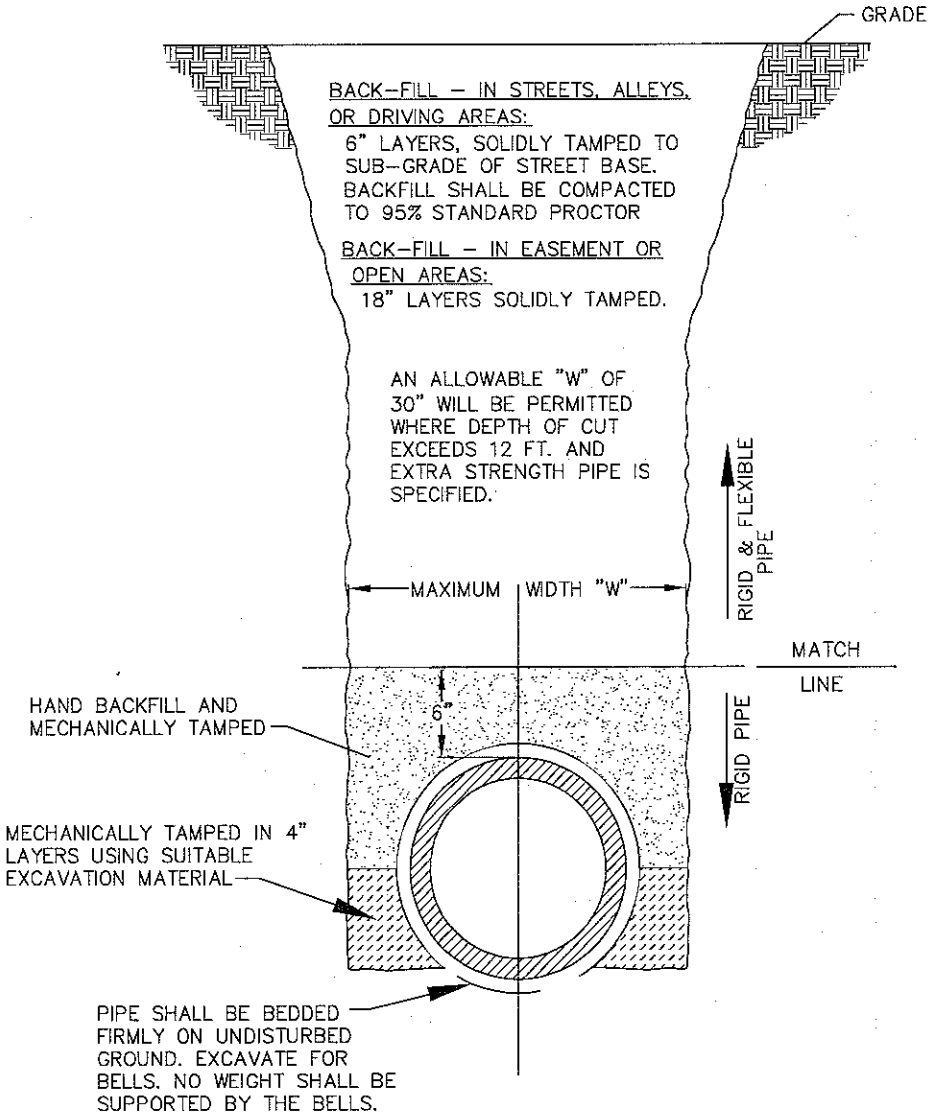

RIGID PIPE BEDDING DETAIL

NOT TO SCALE

CITY OF MANISTEE	
PIPE BEDDING	
REVISION DATE: JAN. 2008	
APPROVED BY:	STANDARD DESIGN: SD - 14.6.6

© COPYRIGHT 2007 ABONMARCHE CONSULTANTS, INC.

E:\CIVIL 3D\ENG\M7(y of Manisteed\dwg\M7-0915 Details O-P.dwg, PipeBed, 7/10/2008 10:48:28 AM, cschindlbeck

MDOT "COVER A"

MDOT "COVER P"

MANHOLE COVER DETAIL
NOT TO SCALE

BOTH STORM AND SANITARY COVERS SHOULD INCLUDE "HISTORIC MANISTEE", BALANCED AT THE TOP AND BOTTOM OF THE COVER. THE LEFT SIDE OF THE COVER SHOULD DESIGNATE EITHER "STORM" OR "SANITARY" WITH "SEWER" ON THE RIGHT SIDE. ALL STORM MH COVERS SHALL MEET MDOT COVER REQUIREMENTS. ALL SANITARY MH COVERS SHALL BE MDOT COVER REQUIREMENTS.

CITY OF MANISTEE	
CASTING COVER	
REVISION DATE: JAN. 2008	
APPROVED BY:	STANDARD DESIGN: SD - 14.6.7

E:\CIVIL 3D\ENG\M7(y of Manistee\dwg\M7-0915 Details A-C.dwg, Castng Cvr, 7/10/2008 10:50:46 AM, cschindlbeck

© COPYRIGHT 2007
ABONMARCHE CONSULTANTS, INC.

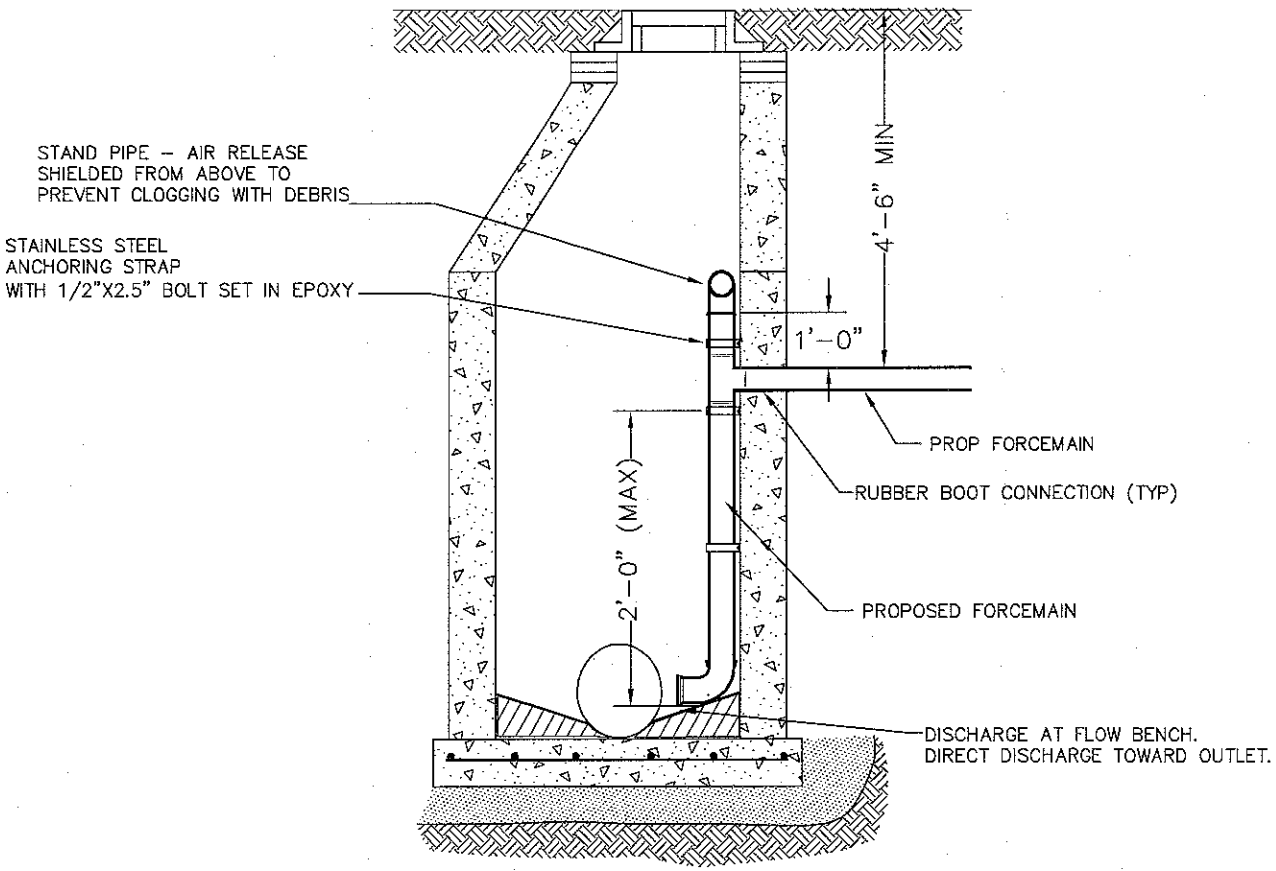

FORCE MAIN OUTLET DETAIL (INTERIOR DROP CONNECTION)

NOT TO SCALE

CITY OF MANISTEE	
FORCE MAIN OUTLET MANHOLE	
REVISION DATE: JAN. 2008	
APPROVED BY:	STANDARD DESIGN: SD - 14.6.8

© COPYRIGHT 2007
ABONMARCHE CONSULTANTS, INC.

E:\CIVIL 3D\ENGM7\ y of Manisteel\dwg\M7-0915 Details M-N.dwg, MH-FM outlet-int drop, 7/10/2008 10:48:44 AM, cschindlbeck

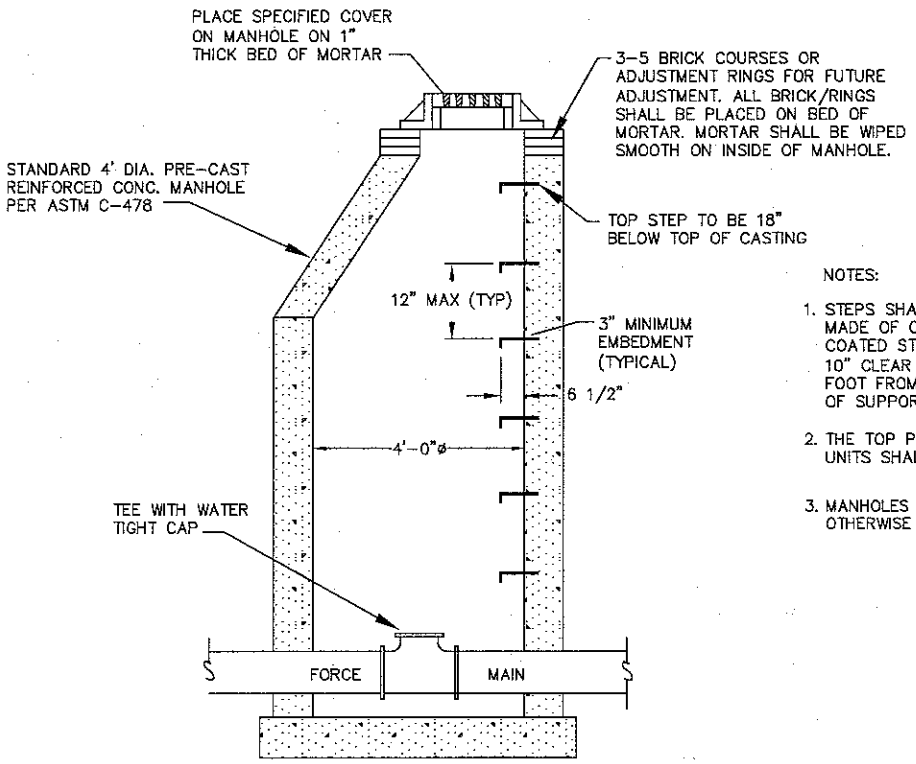

NOTES:

1. STEPS SHALL BE OF AN APPROVED DESIGN, MADE OF CAST IRON, ALUMINUM, OR PLASTIC COATED STEEL. RUNGS SHALL BE A MINIMUM OF 10" CLEAR LENGTH, DESIGNED TO PREVENT THE FOOT FROM SLIPPING OFF THE END AND CAPABLE OF SUPPORTING 300 POUNDS.
2. THE TOP PORTION OF THE PRECAST REINFORCED UNITS SHALL BE ECCENTRIC.
3. MANHOLES TO BE LOCATED AT LOW POINTS & AS OTHERWISE REQUIRED BY THE CITY OF MANSITEE.

FORCE MAIN CLEANOUT MANHOLE

NOT TO SCALE

CITY OF MANISTEE	
FORCE MAIN CLEAN OUT MANHOLE	
REVISION DATE: JAN. 2008	
APPROVED BY:	STANDARD DESIGN: SD - 14.6.9

© COPYRIGHT 2007 ABONMARCHE CONSULTANTS, INC.

E:\CIVIL 3D\ENGM: ity of Manistee\dwg\M7-0915 Details M-N.dwg, MH-FM CO, 7/10/2008 10:48:48 AM, cschindlbeck

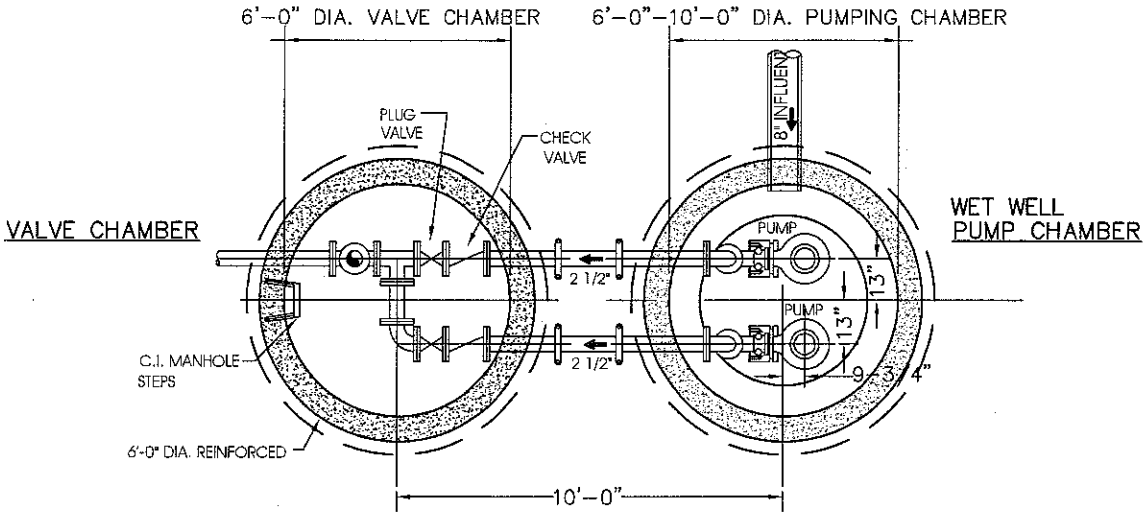

PLAN – PUMPING LEVEL

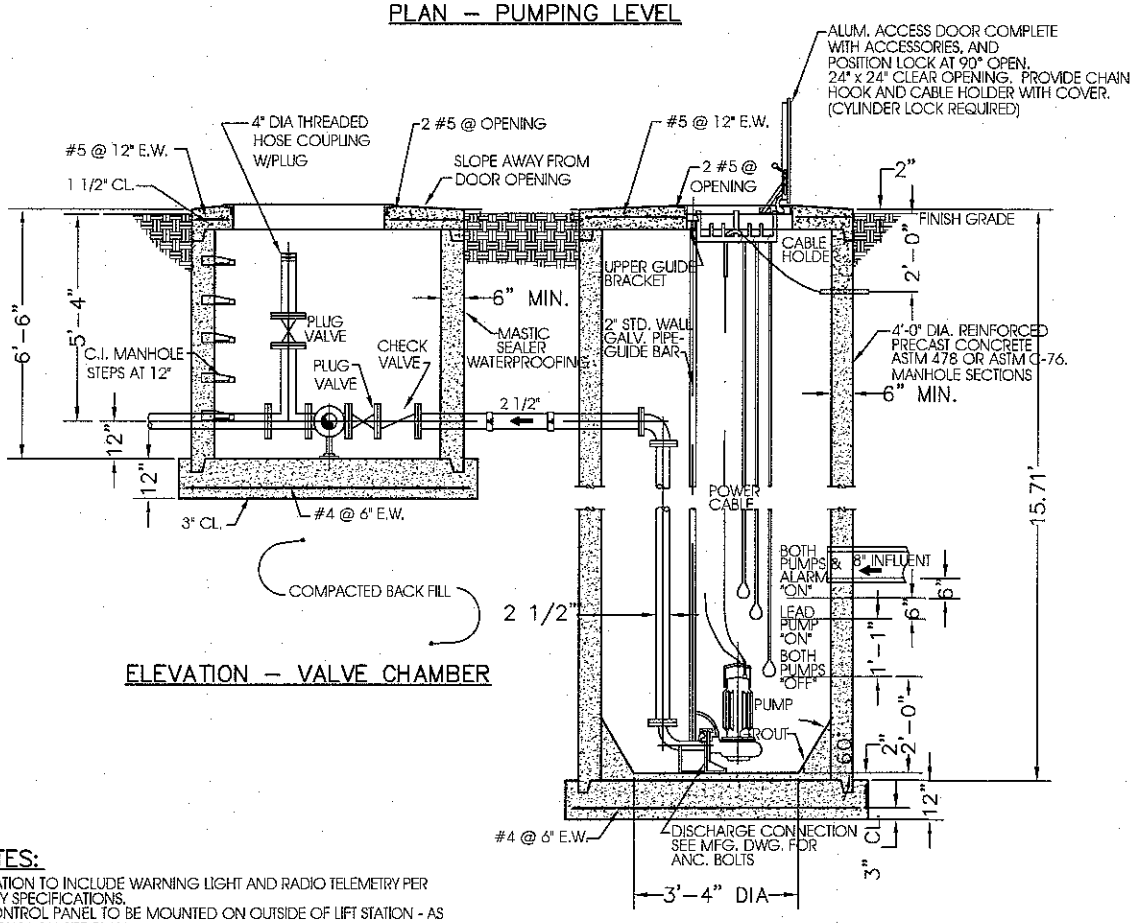

ELEVATION – VALVE CHAMBER

ELEVATION – WET WELL PUMP CHAMBER

NOTES:

1. STATION TO INCLUDE WARNING LIGHT AND RADIO TELEMETRY PER CITY SPECIFICATIONS.
2. CONTROL PANEL TO BE MOUNTED ON OUTSIDE OF LIFT STATION - AS SHOWN ON SITE PLAN.
3. PUMPS TO BE HYDROMATIC SERIES SUBMERSIBLE GRINDER PUMPS THREE PHASE, 480 V.
4. GUIDE RAIL SYSTEM IN ACCORDANCE WITH HYDROMATIC SPECIFICATIONS.
5. CONTROL PANEL TO BE NEMA TYPE 3R.
6. A 100 AMP GENERATOR PLUG SHALL BE INSTALLED IN THE CONTROL PANEL PER CITY STANDARDS.
7. LEVEL CONTROL SYSTEM TRANSDUCERS TO BE IN ACCORDANCE WITH CITY REQUIREMENTS INCLUDING ALTERNATING LEAD/LAG PUMP SWITCH.

CITY OF MANISTEE	
LIFT STATION WET WELL & VALVE VAULT	
REVISION DATE: JAN. 2008	
APPROVED BY:	STANDARD DESIGN: SD - 14.6.10

E:\CIVIL 3D\ENGM: ity of Manistee\dwg\M7-0915 Details D-L.dwg, Lift Sta, 7/10/2008 10:49:38 AM, cschindlbeck

© COPYRIGHT 2007 ABONMARCHE CONSULTANTS, INC.

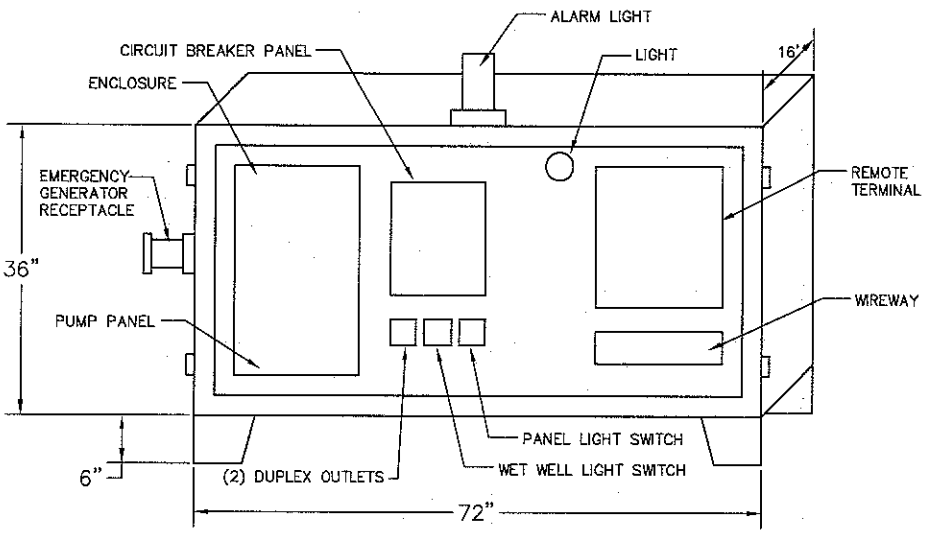

LIFT STATION CONTROL PANEL

NOT TO SCALE

NOTE:

1. 3 PHASE 480 ELECTRIC FOR ALL STATIONS
2. GENERATOR RECEPTACLES SHALL MEET THE PIGTAIL ARRANGEMENT OF THE CITY OF MANISTEE

CITY OF MANISTEE	
LIFT STATION CONTROL PANEL	
REVISION DATE: JAN. 2008	
APPROVED BY:	STANDARD DESIGN: SD - 14.6.11

E:\CIVIL 3D\ENGM: ity of Manistee\dwg\M7-0915 Details D-L.dwg, Lift Sta ContPanel, 7/10/2008 10:49:41 AM, cschindlbeck

©COPYRIGHT 2007 ABONMARCHE CONSULTANTS, INC.

STORMWATER CONTROL

Stormwater Control

15. Filing Information – Final Plans and Specifications

A drainage plan at a scale not less than 1 inch = 50 feet, containing the following:

15.1 Tributary areas showing boundaries and acreage contributing to each structure (including off-site tributary areas).

15.2 Existing and proposed drainage courses, basins, pipes and structures.

15.3 On-site and off-site drainage easements, if applicable.

15.4 Proper identification and numbering of manholes, catch basins and inlets.

15.5 Invert and rim elevations for all structures.

15.6 Pipe length, diameter, slope, material and class.

15.7 Hydraulic grade line.

15.8 Drainage calculations for sizing basin system and piping system.

15.9 Soil boring and permeability test results, including groundwater elevations.

15.10 Basin design: high water level and normal water level.

15.11 Monitoring well details.

15.12 Outlet Details.

15.13 Landscape plan.

15.14 Basin fence and access drive details.

15.15 Note specifying all work shall be completed in accordance with City of Manistee Standards.

15.16 Maintenance plan, including tasks and schedules.

16. Positioning and Design

16.1 The Standard of Design for all pipe and structures shall be determined using MDOT 20 year storm event. The Standard of Design for all detention/retention basins shall be determined using the MDOT 50 year storm event.

16.2 Storm sewer pipe shall be a minimum diameter of 12 inches.

16.3 The maximum distance between catch basins is 400 feet for pipe less than 42 inches in diameter and 600 feet for larger pipe. Catch basins shall be placed at all low points. At a minimum, double inlets shall be required at low points unless sufficient documentation is provided to show that a single inlet has the capacity for design flows without ponding. No more than 150 feet of street drainage shall be allowed to flow around a corner.

16.4 Catch basins and manholes shall be placed at all changes in pipe direction or pipe size and at all inlets.

16.5 The size and grade of the proposed storm sewer shall be shown on the plans.

16.6 Premium joints (rubber or slip seal) shall be used for solid wall pipe.

16.7 Connections to manholes and catch basins shall be made with a resilient connector.

16.8 Storm water inlet structures (catch basins) shall have a 2-foot sump. All structures without direct storm water inlet shall have no sump and a solid lid.

16.9 No discharge of stormwater is permitted to a wetland, except where a system is constructed and maintained to prevent sediment deposition into the wetland and approved by the MDEQ.

16.10 Abandoned, on-site septic/drywell systems shall not be used as stormwater management structures.

16.11 Storm water leaching basins are not permitted in loading/unloading areas (i.e. truck wells, loading docks).

16.12 Floor drains are prohibited unless they are connected to a sanitary sewer, holding tank or a state groundwater discharge permit has been obtained.

16.13 No storm water may be disposed of off-site or to a public or private street except as approved.

16.14 All construction will be in accordance with plans and specification that have been approved by the City Engineer.

16.15 Standard Details

16.15.1 Blank

16.15.2 Standard Storm Manhole

16.15.3 Standard Catch Basin

16.15.4 Leach Basin

16.15.5 Oil Trap Structure

16.15.6 Spillway

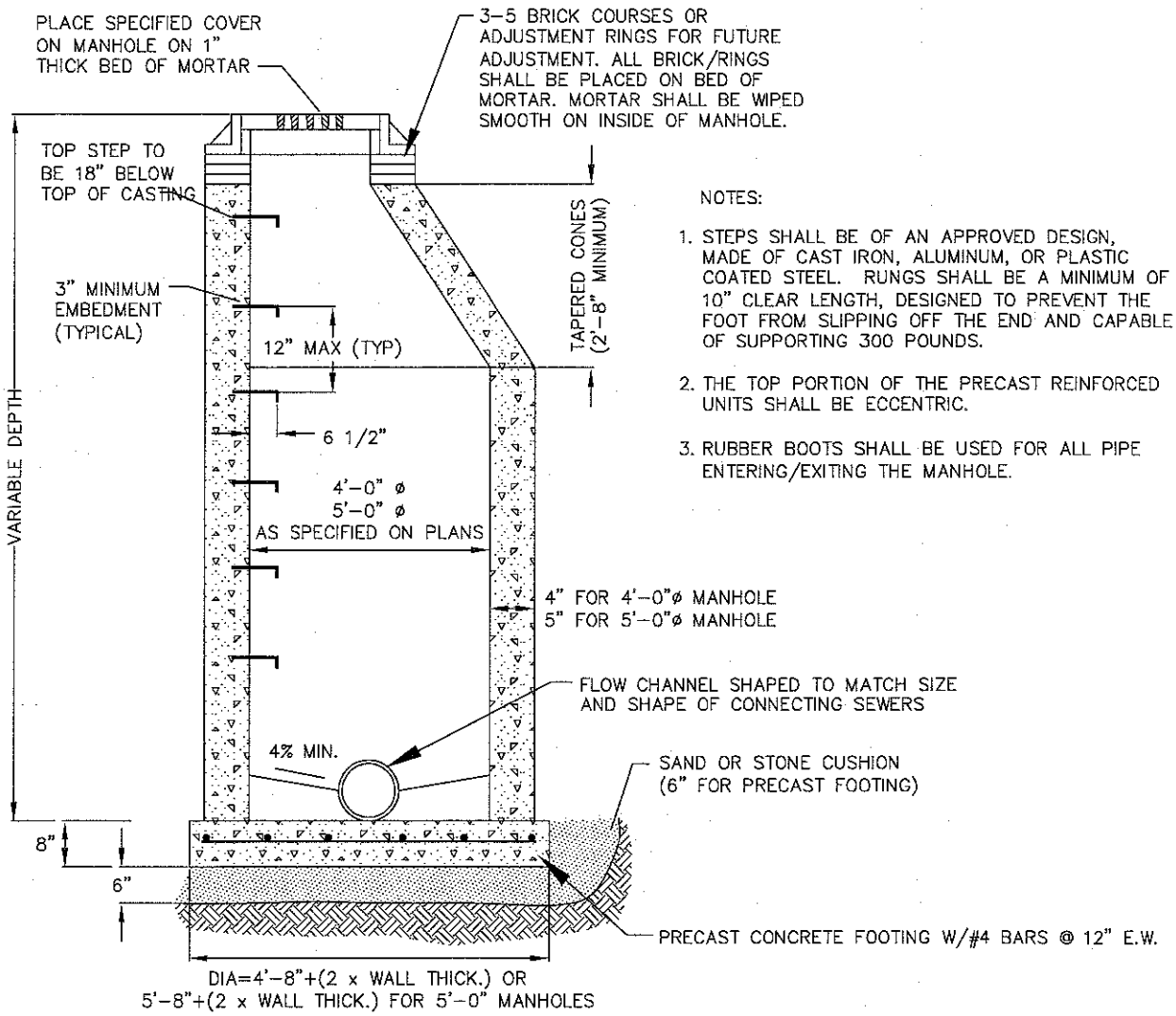

NOTES:

1. STEPS SHALL BE OF AN APPROVED DESIGN, MADE OF CAST IRON, ALUMINUM, OR PLASTIC COATED STEEL. RUNGS SHALL BE A MINIMUM OF 10" CLEAR LENGTH, DESIGNED TO PREVENT THE FOOT FROM SLIPPING OFF THE END AND CAPABLE OF SUPPORTING 300 POUNDS.
2. THE TOP PORTION OF THE PRECAST REINFORCED UNITS SHALL BE ECCENTRIC.
3. RUBBER BOOTS SHALL BE USED FOR ALL PIPE ENTERING/EXITING THE MANHOLE.

STANDARD STORM MANHOLE – 4' OR 5'

NOT TO SCALE

CITY OF MANISTEE	
STANDARD STORM MANHOLE	
REVISION DATE: JAN. 2008	
APPROVED BY:	STANDARD DESIGN: SD - 16.15.2

© COPYRIGHT 2007 ABONMARCHE CONSULTANTS, INC.

E:\CIVIL 3D\ENG\M7(y of Manistee\dwg\M7-0915 Details M-N.dwg, MH-std storm, 7/10/2008 10:48:59 AM, eschindlbeck

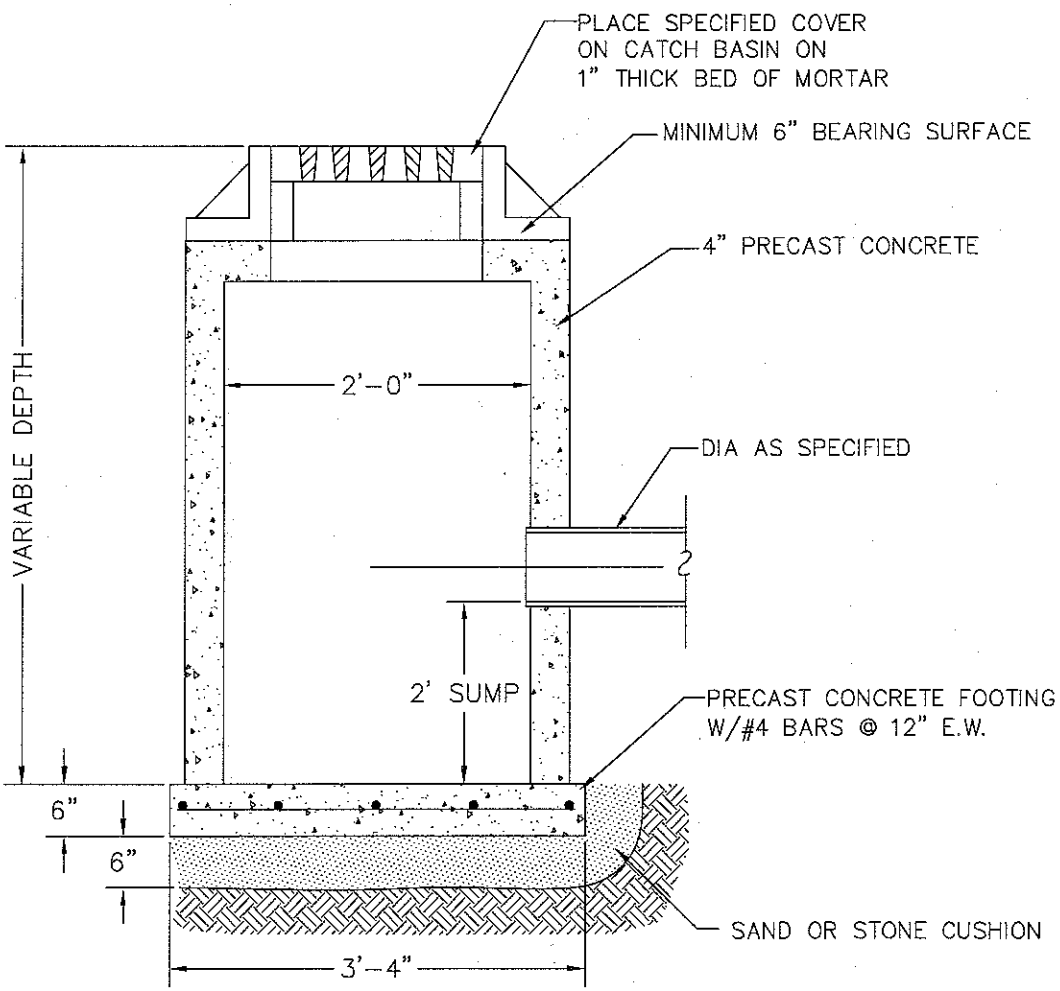

STANDARD CATCH BASIN – 2'

NOT TO SCALE

CITY OF MANISTEE	
CATCH BASIN 2' DIAMETER	
REVISION DATE: JAN. 2008	
APPROVED BY:	STANDARD DESIGN: SD - 16.15.3

© COPYRIGHT 2007
ABONMARCHE CONSULTANTS, INC.

E:\CIVIL 3D\ENGM7\ y of Manistee\dwg\M7-0913 Details A-C.dwg, cb, 7/10/2008 10:50:01 AM, eschindlbeck

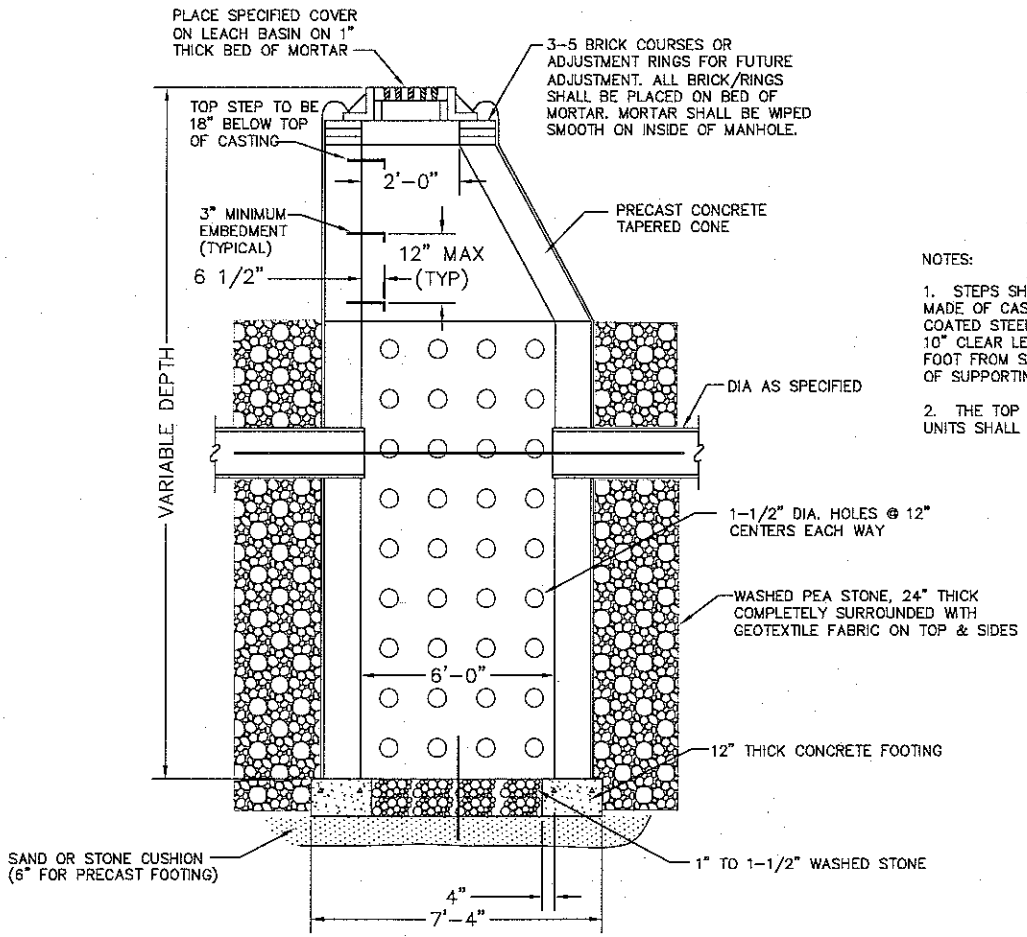

NOTES:

1. STEPS SHALL BE OF AN APPROVED DESIGN, MADE OF CAST IRON, ALUMINUM, OR PLASTIC COATED STEEL. RUNGS SHALL BE A MINIMUM OF 10" CLEAR LENGTH, DESIGNED TO PREVENT THE FOOT FROM SLIPPING OFF THE END AND CAPABLE OF SUPPORTING 300 POUNDS.

2. THE TOP PORTION OF THE PRECAST REINFORCED UNITS SHALL BE ECCENTRIC.

STANDARD LEACH BASIN

NOT TO SCALE

CITY OF MANISTEE	
LEACH BASIN	
REVISION DATE: JAN. 2008	
APPROVED BY:	STANDARD DESIGN: SD - 16.15.4

© COPYRIGHT 2007 ABONMARCHE CONSULTANTS, INC.

E:\CIVIL 3D\ENGM7 y of Manistee\dwg\M7-0915 Details D-L.dwg, LeachBsn, 7/10/2008 10:49:34 AM, eschindlbeck

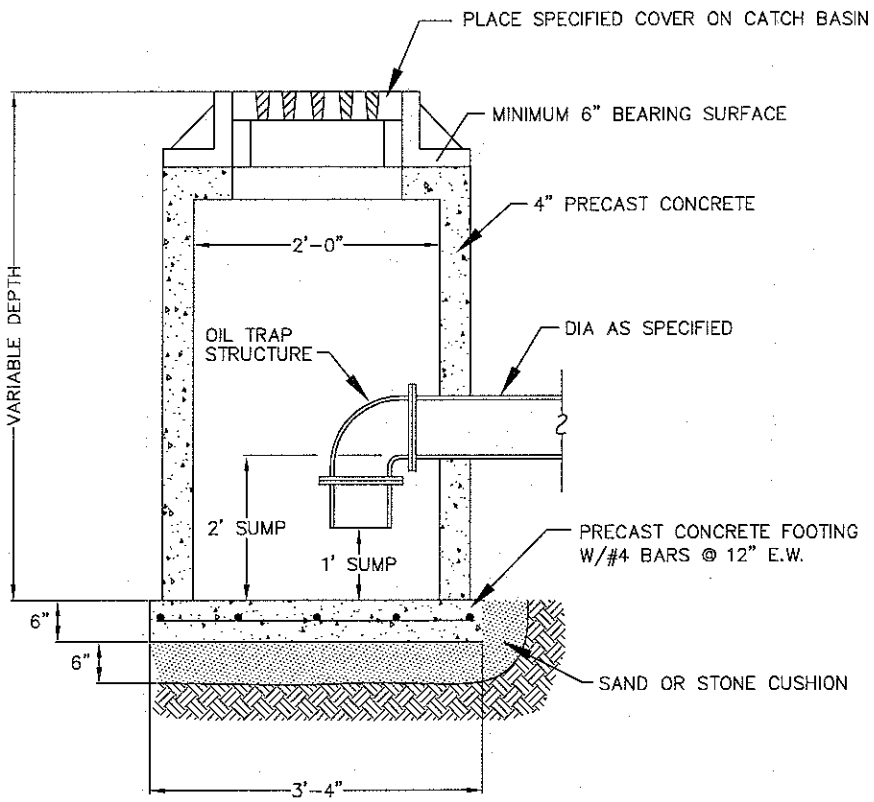

OIL TRAP STRUCTURE – 2'

NOT TO SCALE

CITY OF MANISTEE	
OIL TRAP STRUCTURE	
REVISION DATE: JAN. 2008	
APPROVED BY:	STANDARD DESIGN: SD - 16.15.5

© COPYRIGHT 2007 ABONMARCHE CONSULTANTS, INC.

E:\CIVIL 3D\ENGM7\ ... y of Manistee\dwg\M7-0915 Details O-P.dwg, OilTrap, 7/10/2008 10:48:19 AM, cschindlbeck

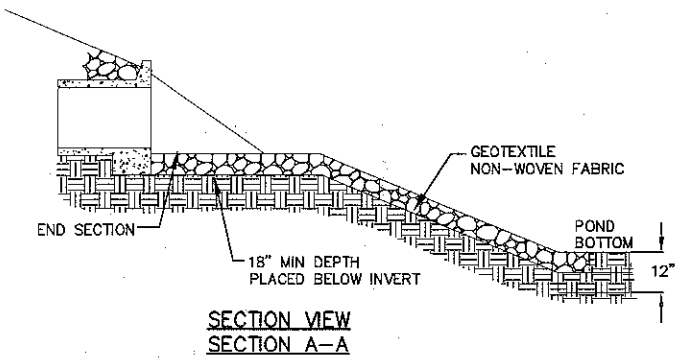

SECTION VIEW
SECTION A–A

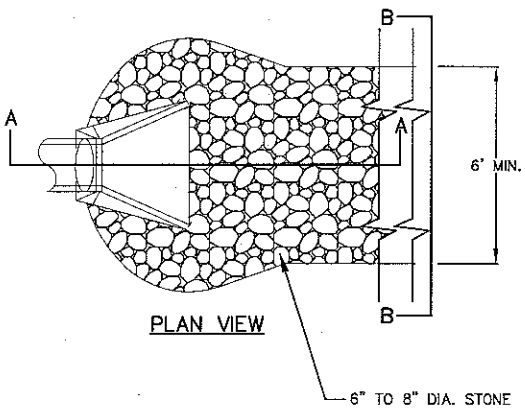

PLAN VIEW

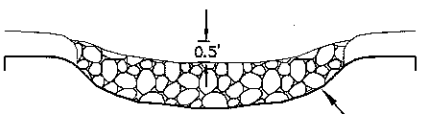

SECTION B–B

ROCK SPILLWAY AT DISCHARGE DETAIL

–NOT TO SCALE–

1. ROCK SPILLWAY TO CONSIST OF 6" TO 8" DIA. STONE WITH 12" MIN. DEPTH.
2. THE STONE SHALL BE UNDERLINED WITH GEOTEXTILE FABRIC.
3. STONE TO EXTEND TO POND BOTTOM, AS SHOWN, OR 2 FEET BELOW WATER ELEV.

CITY OF MANISTEE	
ROCK SPILLWAY	
REVISION DATE: JAN. 2008	
APPROVED BY:	STANDARD DESIGN: SD - 16.15.6

© COPYRIGHT 2007
ABONMARCHE CONSULTANTS, INC.

E:\CIVIL 3D\ENGM7 ty of Manistee\dwg\M7-0915 Details R-Z.dwg, RckSpllwy, 7/10/2008 10:51:06 AM, eschindlbeck